Angular Contact Bearings with Housings

Angular Contact Bearings Back-to-Back Combination + Deep Groove Ball Bearings, with Pilot

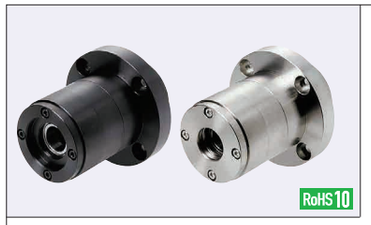

Type	① Angular Contact Bearings (Back-to-Back Combination) ② Deep Groove Ball Bearings	③ Housing, ④ Inner Ring Spacer, ⑤ Standard Cover ⑥ Standard / Oil Seal / O-Ring Cover ⑦ Inner Ring Collar		⑧ Cover Mounting Screw	
	M Material	M Material	S Surface Treatment	M Material	S Surface Treatment
ABGYB	EN 1.3505 Equiv.	EN 1.1191 Equiv.	Black Oxide	EN 1.7220 Equiv.	Black Oxide
ABGY			Electroless Nickel Plating	EN 1.4301 Equiv.	-

- The Angular Contact Bearings with Housing is delivered with the parts unassembled to the holder body.
- Make sure that bearing outer rings and inner rings are firmly fixed by the covers and bearing nuts before use. 1mm axial clearance is designed on each side of the deep groove bearing outer ring where the inner ring can be tightened without adjusting the length of the inner ring spacer.
- A standard cover is included with the deep groove ball bearing side ⑤ as a standard accessory. For Angular Contact Bearings ⑥, please select N Standard Covers, S Oil Seal Covers or R O-Ring Covers.
- Contact with O-Ring may generate some friction.

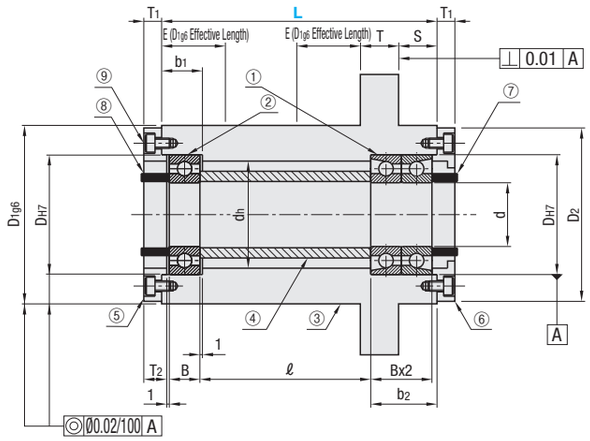

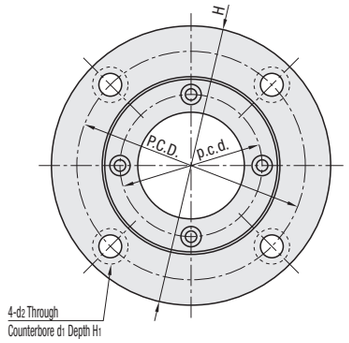

Bearing Accuracy (① Angular Contact Bearings) JIS B 1514 Class 4 * Contact Angle 15°
(② Deep Groove Ball Bearings) JIS B 1514 Class 0

⑤Standard Cover (Included)

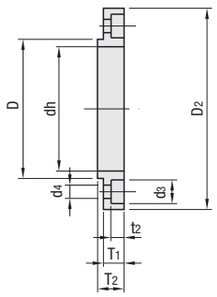

⑥ (Selectable)

Standard

N

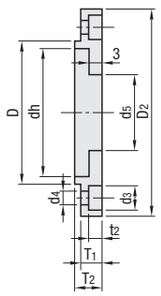

Cover for Oil Seal

S

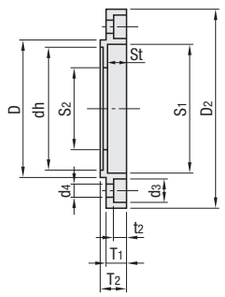

A Accessory: Oil Seal (JIS G/D Nitrile Rubber)

Cover for O-Ring

R

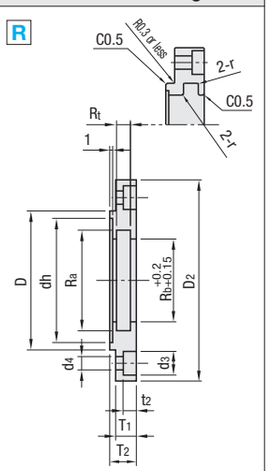

A Accessory: O-Ring (JIS P Nitrile Rubber)

Part Number Type	Part Number Bearing No.	⑥ Cover Selection	L	S	d	DH7	Tolerance	B	b1	b2	Deep Groove Ball Bearing No.	H	D2	T	dh	E	D1g6	Tolerance	P.C.D.	d1	d2	H1
ABGYB (Black Oxide) / ABGY (Electroless Nickel Plating)	7002	N Standard / S Oil Seal / R O-Ring	60 75	10	15	32	+0.025 0	9	13	20	6002ZZ	75	48	12	28	18	50	-0.009 -0.025	62	11	6.6	6.5
	7003		70 85		17	35		10	14	22	6003ZZ				31							
	7004		80 100	15	20	42		12	16	26	6004ZZ	92	58	15	36	22	60	-0.010 -0.029	75	14	9	8.5
	7005		100 125		25	47					6005ZZ	98	63		41		65		80			
	7006		120 150		30	55	+0.030 0	13	17	28	6006ZZ	120	78	18	48	27	80		98	17.5	11	10.5
	7007		140 175		35	62		14	18	30	6007ZZ	126	84		55		86	-0.012 -0.034	106			
	7008		160 200	20	40	68		15	19	32	6008ZZ	140	92	20	60	30	95		116			
	7009		180 225		45	75		16	20	34	6009ZZ	145	98		69		100		122			
	7010		200 250		50	80					6010ZZ	147	101		74		105		124			

No.	⑤ ⑥ Cover Details D	D2	dh	T1	T2	p.c.d.	d3	d4	t2	⑥ Cover Details N Standard Cover d5	S Oil Seal Cover S1	S2	St	Accessory Oil Seal	R O-Ring Cover Ra	Rb	Rt	r	Accessory O-Ring	⑨ Cover Mounting Screw
7002	32	48	28	6	8	40	6.5	3.5	3.1	21	32	22	5	G20325	24	20	3.2	0.4	P20	M3-8
7003	35		31																	
7004	42	58	36	7	9	48	8	4.5	4.1	26	35	27	6	D25356	31	25	4.7	0.7	P25	M4-10
7005	47	63	41	8	10	53				31	40	32	7	D30407	36	30			P30	
7006	55	78	48			64	9.5	5.5	5.1	41	50	42	6.5	D40506.5	41	35			P35	M5-12
7007	62	84	55	9	11	72				46	60	47	9	D45609	46	40			P40	
7008	68	92	60			78	11	6.6	6.1	51	65	52		D50659	51	45			P45	M6-12
7009	75	98	69			85				56	70	57		D55709	56	50			P50	
7010	80	101	74	11	13	88				61	75	62		D60759	70	60	7.5	0.8	P60	M6-15

No.	⑦ Collar Details O.D.	I.D.	Thickness	⑧ Collar Details O.D.	I.D.	Thickness	④ Inner Ring Spacer Details O.D.	I.D.	Thickness (ℓ)
7002	20	15	8.5	20	15	9.5	20	15	L-32
7003		17			17			17	L-35
7004	25	20	9.5	25	20	10.5	25	20	L-41
7005	30	25	10.5	30	25	11.5	30	25	L-41
7006	40	30		40	30		40	30	L-44
7007	45	35	11.5	45	35	12.5	45	35	L-47
7008	50	40		50	40		50	40	L-50
7009	55	45		55	45		55	45	L-53
7010	60	50	13.5	60	50	14.5	60	50	L-54

Ordering Example

Part Number				
Type	Bearing	Cover		L
ABGY	7004	- R	-	100

Example

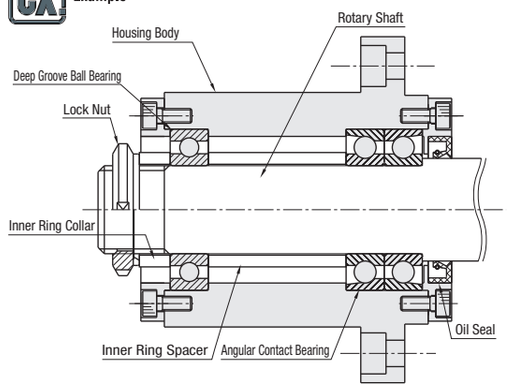

Bearing No.	L	ABGYB Cover N Unit Price 1 pc.	Volume Discount Rate 2 ~ 4 pcs.	Cover S Unit Price 1 pc.	Volume Discount Rate 2 ~ 4 pcs.	Cover R Unit Price 1 pc.	Volume Discount Rate 2 ~ 4 pcs.	ABGY Cover N Unit Price 1 pc.	Volume Discount Rate 2 ~ 4 pcs.	Cover S Unit Price 1 pc.	Volume Discount Rate 2 ~ 4 pcs.	Cover R Unit Price 1 pc.	Volume Discount Rate 2 ~ 4 pcs.
7002	60												
	75												
7003	70												
	85												
7004	80												
	100												
7005	100												
	125												
7006	120												
	150												
7007	140												
	175												
7008	160												
	200												
7009	180												
	225												
7010	200												
	250												