Floating Joints
-Standard-

Part Number & Spec.Change Printed in Purple

CAD Data

■Surface treatment of 1.4301/X5CrNi18-10 has changed from Salt-bath Nitriding to Nitriding treatment. Better corrosion resistance and hardness, less particle generation on the surface than the conventional products.

■Standard Type

RoHS10

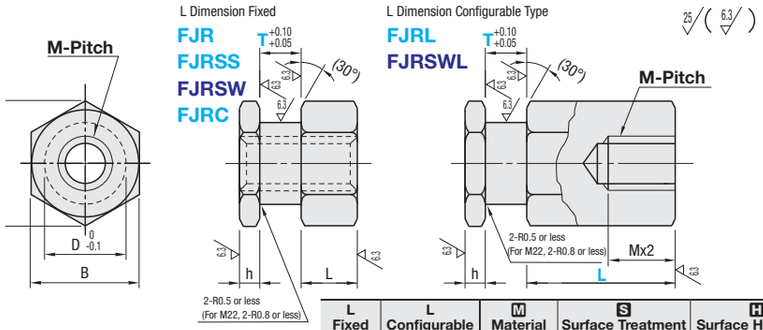

L Fixed	L Configurable	M Material	S Surface Treatment	H Surface Hardness
FJR	FJRL	1.1191/C45E	Salt-bath Nitriding	500HV~
FJRSS	-	1.4301/X5CrNi18-10	-	-
FJRSW	FJRSWL		Nitride Treatment	1000HV~
FJRC	-		Hard Chrome Plating	750HV~

Salt-bath Nitriding treatment may cause uneven color, which doesn't affect mechanical function.
For details of Salt-bath Nitriding, refer to **P.1799**
No Salt-bath Nitriding treatment on the screw end of L Dimension Configurable Type.

Part Number Type	M-Pitch	T Selection	L Selectable	L Configurable (1mm Increment)	h	D	B	(C)	€ Unit Price L Fixed FJR	FJRSS	FJRSW	FJRC	L Configurable FJRL	FJRSWL
L Fixed FJR FJRSS (★For T Dimension only.)	3-0.5	2 3★ 4*★ 5 6	5	3~50	3	6	8	9.2						
	4-0.7	2 3★ 4*★ 5★ 6★ 8★	6	3~60		7	10	11.5						
	5-0.8	3★ 4★ 5★ 6*★ 8★ 9★ 10★	7	3~60		8	12	13.9						
	6-1.0	3 4★ 5★ 6*★ 8★ 9 10 12	8	4~80		10	14	16.2						
	8-1.0	4 5★ 6★ 8*★ 9 10 12★ 13 15 16	9	4~100		13	17	19.6		✕		✕		
	8-1.25													
FJRSW	10-1.25	4 5 6★ 8*★ 9★ 10★ 12★ 13 15 16 19 20	11	4~100	4	16	21	24.2						
	10-1.5									✕		✕		
FJRC	12-1.25	5 6 8 9 10 12*★ 13 15 16 19 20	12	5~100		18	23	26.6						
	12-1.5									✕		✕		
L Configurable FJRL FJRSWL	14-1.5	5 6 8★ 9★ 10★ 12*★ 13 15 16★ 19★ 20	13	5~100		21	26	30						
	16-1.5	8 9 10 12 13 15* 16 19 20	15	8~100	5	25	30	34.6		✕				
	18-1.5	8 9 10 12★ 13 15*★ 16 19 20		8~100										
	22-1.5	12 15 20*	17	10~100	6	27	32	36.9		✕	✕	✕		✕

For L Dimension Configurable type, when h+T+L≤3M, the tapped hole goes through. When T=2, only FJR is available.
* for T dimension only. Thread diameters 8, 10 and 12 are only applicable to 8-1.25, 10-1.25 and 12-1.25.

■Floating Joints and Holders Application Table (FJR · FJR_ · FJR_ _ · FJR_ _ _)

M-Pitch	FJR FJR_ FJR_ _ T Dim.*	HLRA_ P.1429 HLRB_ P.1429 HLRC_ P.1430	FJR FJR_ FJR_ _ T Dim.*	HLRE_ P.1428	FJR FJR_ FJR_ _ T Dim.	HLRD_ P.1430	FJR FJR_ FJR_ _ T Dim.	HLRL_ P.1428	FJR FJR_ FJR_ _ T Dim.	HLRAF P.1429
3-0.5	4	6	4	-	-	-	-	-	3~6	6-3~6
4-0.7		7		7	8	7	6	7	3~8	7-3~8
5-0.8	6	8	6	8	10	8		8	3~10	8-3~10
6-1.0		10		10	12	10		10	3~12	10-3~12
8-1.0	8	13	8	13	13	13		13	4~12	13-4~12
8-1.25										
10-1.25		16		16	15	16	8	16	5~15	16-5~15
10-1.5										
12-1.25	12	18	12	18	16	18		18	-	-
12-1.5										
14-1.5		21		21	19	21	10	21	6~15	21-6~15
16-1.5	15	25	15	25	20	25		25	8~20	25-8~20
18-1.5										
22-1.5	20	27	20	-	-	-	-	-	12~20	27-12~20

For holders of size 27, only HLRA · HLRC is available.
* For detailed holder dimensions, refer to **P.1428~1430**

■Floating Joints and Holders Application Table (FJD · FJDSW · FJDL)

M-Pitch	FJD_ FJDSW_ T Dim.*	HLRA_ P.1429 HLRB_ P.1429 HLRC_ P.1430	FJD_ FJDSW_ T Dim.*	HLRE_ P.1428	FJD_ FJDSW_ T Dim.	HLRD_ P.1430	FJD_ FJDSW_ T Dim.	HLRL_ P.1428	FJD_ FJDSW_ T Dim.	HLRAF P.1429
3-0.5	4	4	4	-	-	-	-	-	-	-
4-0.7										
5-0.8		6							3~6	6-3~6
6-1.0		7		7	8	7	6	7	4~8	7-4~8
8-1.25	6	10	6	10	12	10		10	5~12	10-5~12
10-1.5	8	13	8	13	-	-		13	6~12	13-6~12
16-2.0	12	21	12	21			-	-	-	-
20-2.5	15	25	15	25	20	25			15~20	25-15~20
22-2.5	20	27	20	-	20	25			12~20	27-12~20

For holders of size 27, only HLRA · HLRC is available.
* For detailed holder dimensions, refer to **P.1428~1430**

■Nitride Treatment
Pretreatment of JIS SUS facilitates formation of nitride layer.

Order Example

Part Number	-	T	-	L
FJR5-0.8	-	6		
FJRL14-1.5	-	12	-	20
FJRC10-1.25	-	8		

Days to Ship 8 Days | Express A 2,00 EUR/piece | P.88
A Express Charge of 5,40 EUR for 3 or more identical pieces.
Express Serviceis not available for FJRC · FJRSS and FJRL.

Price

■Volume Discount (Round down to one Cent.) **P.87**

Quantity	1~9	10~14	15~19	20~49
Discount Rate	€ Unit Price	5%	10%	18%

For orders of 30 or more pieces of L Dimension Configurable Type, please request a quotation.

Compact Floating Joints · Floating Joints
-Male Thread Type- -Sheet Metal Holder Set-

Part Number & Spec.Change Printed in Purple

CAD Data

■Surface treatment of 1.4301/X5CrNi18-10 has changed from Salt-bath Nitriding to Nitriding treatment. Better corrosion resistance and hardness, less particle generation on the surface than the conventional products.

■Compact Floating Joint -Male Thread Type-

RoHS10

Type L Fixed	L Configurable	M Material	S Surface Treatment	H Surface Hardness
FJD	FJDL	1.1191/C45E	Salt-bath Nitriding	500HV~
FJDSW	-	1.4301/X5CrNi18-10	Nitride Treatment	1000HV~

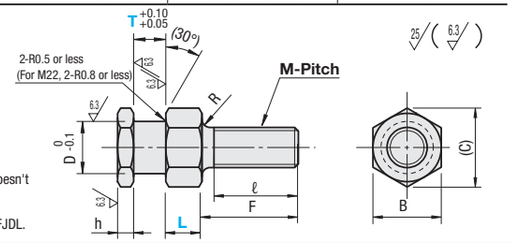

Salt-bath Nitriding may cause uneven color, which doesn't affect mechanical function.
For details of Salt-bath Nitriding, refer to **P.1799**
No Salt-bath Nitriding treatment on F Dimension for FJDL.

Part Number Type	M-Pitch	T Selection	L Selectable	L Configurable (1mm Increment)	h	D	F	ℓ	B	(C)	R	€ Unit Price L Fixed FJD	FJDSW	L Configurable FJDL
L Fixed FJD FJDSW	3-0.5	3 4*	4	3~15	3	4	8	6	6	6.9	1			
	4-0.7	3 4* 5 6 8	5	3~20			11	9						
	5-0.8	3 4* 5 6 8 9 10		3~25			6	13	11	8	9.2			
	6-1.0	4* 5 6 8	6	4~30			7	19	17	10	11.5			
	8-1.25	5 6* 8 12	8	4~40			10	20	18	14	16.2	1.5		
L Configurable FJDL	10-1.5	6 8* 9 10 12	9	4~50	4		13	24	21	17	19.6			
	16-2.0	12* 20	12	8~80			21	40	37	26	30	2		
	20-2.5	15* 20	15	10~100	5		25	50	46	30	34.6			
	22-2.5	12 15 20*	17	10~100	6		27	60	56	32	36.9	2.5		

For Floating Joints and Holders Application Table, refer to the left page.

Order Example

Part Number	-	T	-	L
FJD5-0.8	-	5		
FJDL10-1.5	-	8	-	20

Days to Ship -FJD 8 Days | Express A 2,00 EUR/piece | P.88
A Express Charge of 5,40 EUR for 3 or more identical pieces.
-FJDSW · FJDL 8 Days

Price

■Volume Discount (Round down to one Cent.) **P.87**

Quantity	1~9	10~14	15~19	20~49
Discount Rate	€ Unit Price	5%	10%	15%

For orders of 20 or more pieces, please request a quotation.

■Floating Joint -Sheet Metal Holder Set-

RoHS10

Type	M Material Floating Joint	Holder	S Surface Treatment	H Surface Hardness
FJSC	1.1191/C45E	1.0330/DC01	Salt-bath Nitriding	500HV~

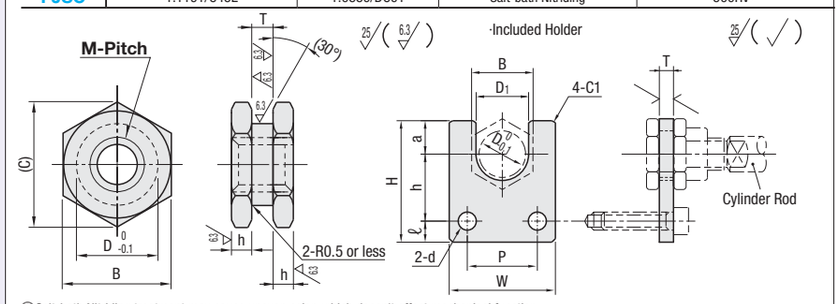

Salt-bath Nitriding treatment may cause uneven color, which doesn't affect mechanical function.
For details of Salt-bath Nitriding, refer to **P.1799**.

Part Number Type	M-Pitch	T	Tolerance	h	D	B	(C)	Included Holder T	Tolerance	B	D1	W	H	a	h	ℓ	P	d	Maximum Applied Tensile · Compression Force (N)	€ Unit Price
FJSC	3-0.5	2.3	+0.3 +0.25	2	6	8	9.2	2.3	±0.19	8	6.5	16	25	5	14	6	8	4.5	19	
	4-0.7				7	10	11.5			10	8	19	26	6			10		54	
	5-0.8	3.2	+0.35 +0.3	3	8	12	13.9	3.2	±0.23	12	9	22	33	7	18	8	12	5.5	123	
	6-1.0				10	14	16.2			14	11	25	34	8			14		123	

kgf=Nx0.101972

Order Example

Part Number
FJSC4-0.7

Days to Ship 8 Days | Express A 2,00 EUR/piece | P.88
A Express Charge of 5,40 EUR for 3 or more identical pieces.

Price

■Volume Discount (Round down to one Cent.) **P.88**

Quantity	1~9	10~14	15~19
Discount Rate	€ Unit Price	5%	10%
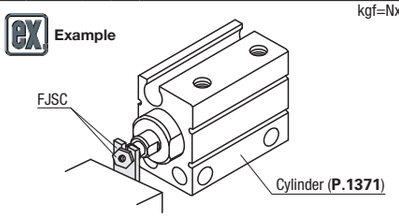
Example