Shaft Collar DCut Standard / Compact (Space-Saving Design)

Set Screw / Clamp / Split

Features: Mounting holes on a flat side enable easy installation of sensor brackets. EN AW-2017 Equiv. (aluminum) is recommended for weight saving.

Standard Set Screw

RoHS10

Type	Material	Surface Treatment	Accessory (Set Screw 2 pcs.)
SDSN	EN 1.1191 Equiv.	Black Oxide Coating	EN 1.7220 Equiv.
PSDSN		Electroless Nickel Plating	EN 1.4301 Equiv.
SSDSN	EN 1.4301 Equiv.	-	

• D=6, 8

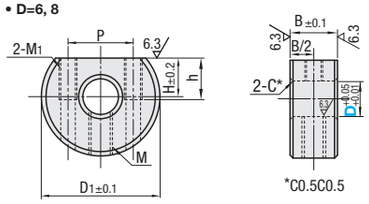

• D=10~30

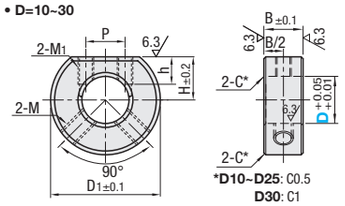

Standard Clamp

RoHS10

Type	Material	Surface Treatment	Accessory (Hex Socket Head Cap Screw 1 pc.)
SDS	EN 1.1191 Equiv.	Black Oxide Coating	EN 1.7220 Equiv.
PSDS		Electroless Nickel Plating	
SSCDS	EN 1.4301 Equiv.	-	EN 1.4301 Equiv.
SDSA	EN AW-2017 Equiv.	-	

• EN 1.1191 Equiv., EN 1.4301 Equiv.

D	Z
8	8
10	10
12	10
13	10
15	12

• EN AW-2017 Equiv.

D	Z
8	8
10	10
12	10
15	12
16	12
20	13
25	16
30	18

Clamping is applicable to D8~15 only.

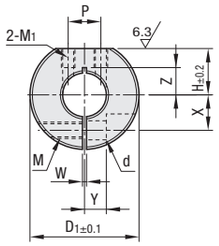

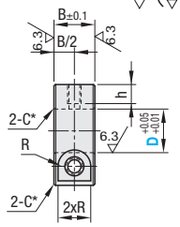

*D8 ~D25: C0.5
D30~D50: C1

Standard Split

RoHS10

Type	Material	Surface Treatment	Accessory (Hex Socket Head Cap Screw 2 pcs.)
SDN	EN 1.1191 Equiv.	Black Oxide Coating	EN 1.7220 Equiv.
PSDN		Electroless Nickel Plating	
SSCDN	EN 1.4301 Equiv.	-	EN 1.4301 Equiv.
SDNA	Aluminum Alloy 2000 series	-	

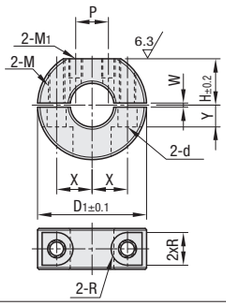

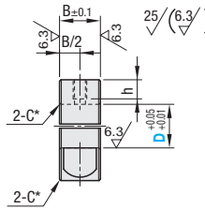

*D8 ~D25: C0.5
D30~D50: C1

Part Number Type	D	D_1	B	H	M_1	P	h	Set Screw M x Length	Unit Price SDSN	PSDSN	SSDSN
(Set Screw) SDSN PSDSN SSDSN	6	20	8	6.5	M3	11	7	M4x4			
	8	22		7		13					
	10	25		10		8					
	12	28	10	11	M4	10		M5x6			
	15	30		12.5			5				
	20	35		15							
	25	42	12	18	M5	12	6	M6x6			
	30	45		20			5				-

M_1 effective thread depth is 7mm (pilot hole through) for D6 ~ 12.

Part Number Type	D	D_1	B	M (Coarse)	d	R	H	M_1	P	h	W	X	Y	Unit Price Clamp Type SDS	PSDS	SSCDS	SDSA	Split SDN	PSDN	SSCDN	SDNA
(Clamp) SDS PSDS SSCDS SDSA	*8	30	15	M5	5.5	4.5	13	M3	8	7	1.5	10	6								
	*10	35					15	M4	10			11.5									
	*12																				
	13																-				-
(Split) SDN PSDN SSCDN SDNA	*15	40		M6	7	6	17	M5	12			13	8								
	*16																				
	18	45					18.5		15	9		15				-	-				-
	*20																				
	*25	50					21		20	10		18	10								
	*30	55					23.5		21			20									
	35	60					26	M6	23		2.0	23	12				-				-
	40	70	18	M8	9	7	30		26	12		26	13				-				-
	50	85	22	M10	11	9	37	M8	28	13	3.0	32	16				-				-

Aluminum Alloy 2000 series is available for * marked sizes only.

M_1 effective thread depth is 7mm (pilot hole through) for D8~15 of EN 1.0038 Equiv. (EN 1.1191 Equiv.). For others, tapped holes are through.

M_1 effective thread depth is 7mm (pilot hole through) for D8~12 and D15~18 of EN 1.4301 Equiv. For others, tapped holes are through.

The halves must remain in the same orientation as shipped when in use.

Features: Smaller by up to 46% in width (B dim.) and 22% in O.D. (D_1 dim.) than D Cut Standard Type (**P.289**)

Compact Clamp

RoHS10

Type	Material	Surface Treatment	Accessory (Hex Socket Head Cap Screw 1 pc.)
SDSJ	EN 1.1191 Equiv.	Black Oxide Coating	EN 1.7220 Equiv.
PSDSJ		Electroless Nickel Plating	EN 1.4301 Equiv.
SSCDSJ	EN 1.4301 Equiv.	-	

Refer to Size Comparison Table below.

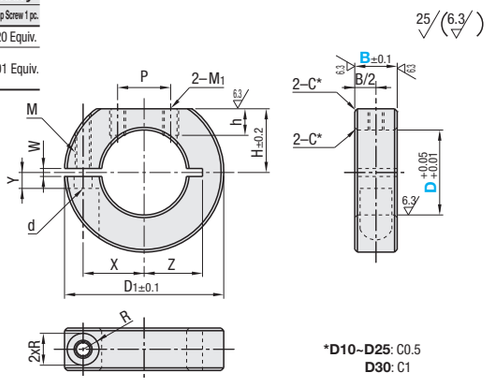

*D10~D25: C0.5
D30: C1

Compact Split

RoHS10

Type	Material	Surface Treatment	Accessory (Hex Socket Head Cap Screw 2 pcs.)
SDNJ	EN 1.1191 Equiv.	Black Oxide Coating	EN 1.7220 Equiv.
PSDNJ		Electroless Nickel Plating	EN 1.4301 Equiv.
SSCDNJ	EN 1.4301 Equiv.	-	

Refer to Size Comparison Table below.

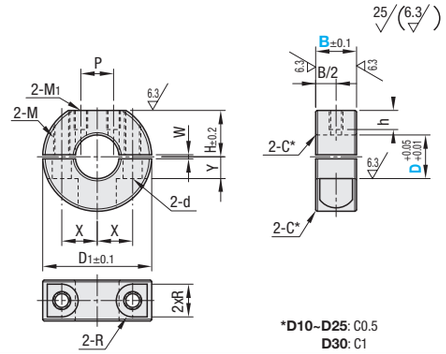

*D10~D25: C0.5
D30: C1

Part Number Type	D	B Selection	D_1	M (Coarse)	d	R	W	X	Y	Z	M_1	H	h	P	Unit Price Clamp Type SDSJ	PSDSJ	SSCDSJ	Split SDNJ	PSDNJ	SSCDNJ
(Clamp) SDSJ PSDSJ SSCDSJ	10	8	30	M3	3.4	3	1.5	9	5	8~10	M3	12	5	8						
	12							10		9~10										
	15							11	3	11				10						
	16							11.5					4.8							
(Split) SDNJ PSDNJ SSCDNJ	20		35					13	5	13		15	5							
	25	10	42	M4	4.5	3.75		16.5		16.5	M4	18.5	6	12						
	30	12	50	M5	5.5	4.5		20	6	20		22								

The halves must remain in the same orientation as shipped when in use.

Ordering Example

Part Number	-	B
SDNJ10	-	8
SDSJ16	-	8
SDS10		

Example

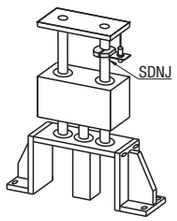

Size Comparison Table

D	Size Differences B (Thickness)	Size Differences D_1 (O.D.)	Compact B (Thickness)	Compact D_1 (O.D.)	Standard (P.251) B (Thickness)	Standard (P.251) D_1 (O.D.)
10	-7	-5	8	30	15	35
12	-7	-5	8	30	15	35
15	-7	-10	8	30	15	40
16	-7	-10	8	30	15	40
20	-7	-10	8	35	15	45
25	-5	-8	10	42	15	50
30	-3	-5	12	50	15	55