Single Axis Actuators LX30 Standard / Cover Type

Convenient Sensor Sets are also available. P.428

Design/Utility Model Registered

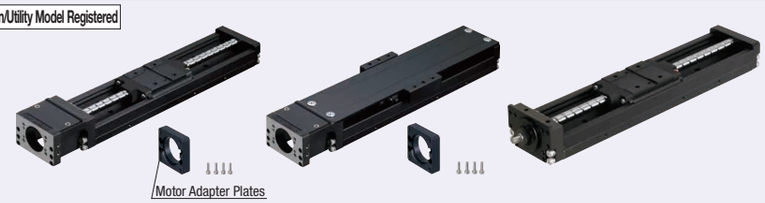

<Standard Long Block Type> <Long Blocks with Cover> <Standard No Motor Bracket Type>

Specifications	
LX30	
Standard / Cover	
Screw Shaft Dia. (mm)	10
Lead (mm)	5, 10
Accuracy	High Grade / Precision Grade

A Accessory

①Motor Adapter Plates
M EN AW-5052 Equiv. S Black Anodize
②Adapter Plate Screw 4 pcs. M EN 1.4567 Equiv.
No accessory is included with No Motor Bracket Type.

For Material table, see P.411.

Part Number	Standard Grease		Low Dust Generation Grease		Lubrication Unit MX-equipped (Standard Grease)	
	High Grade	Precision Grade	High Grade	Precision Grade	High Grade	Precision Grade
Lead 5	LX3005(C)	LX3005(C)P	LX3005(C)G	LX3005(C)PG	LX3005(C)-MX	LX3005(C)P-MX
Lead 10	LX3010(C)	LX3010(C)P	LX3010(C)G	LX3010(C)PG	LX3010(C)-MX	LX3010(C)P-MX

(C) is for Cover Type. Low Dust Generation Grease Information P.414 Lubrication Unit MX Information P.408

Standard Short Block Type

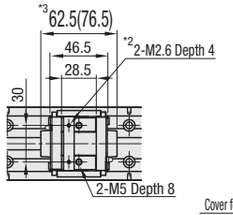

Standard Long Block Type

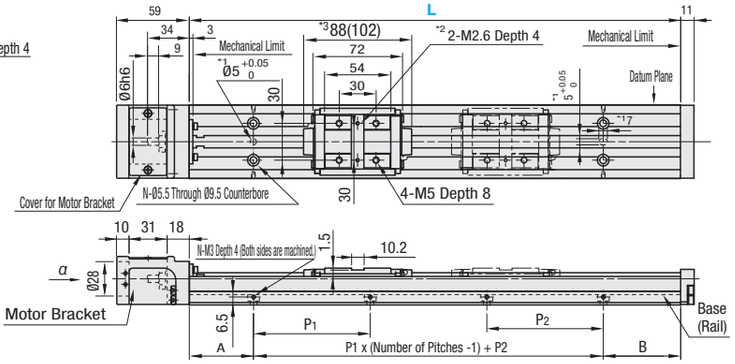

Short Blocks with Cover

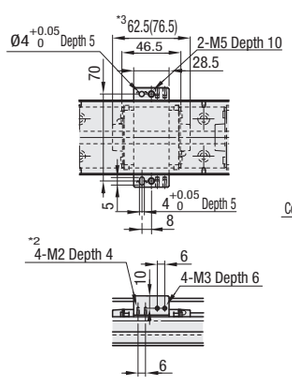

Long Blocks with Cover

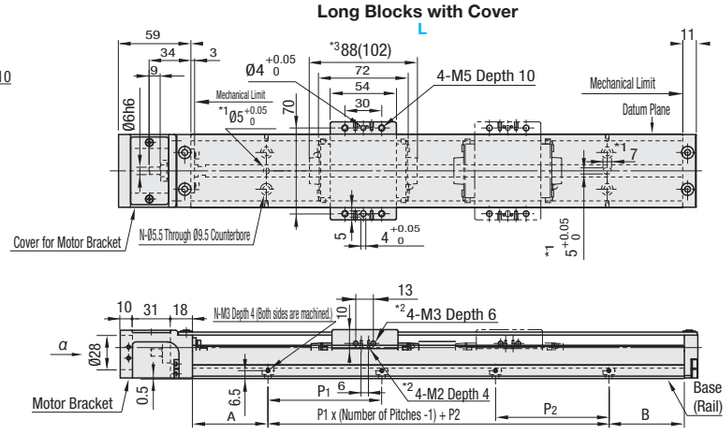

*1: Dowel Holes for Base Positioning
*2: Tapped Holes for Sensor Flag Mount
*3: Value in ( ) is for Lubrication Unit MX-equipped Type.

Standard Type

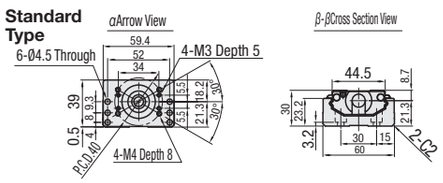

Cover Type

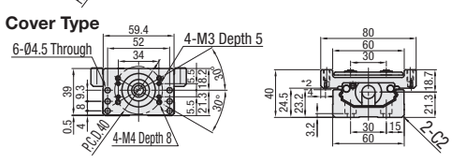

Effective stroke is the value with 2.5mm margin on each side from mechanical limits, i.e., 5mm in total.
For Double Block Type, double-dashed lined blocks are not connected with the ball screw.
For Double Block Type, effective strokes are the values when two blocks contact with each other.
Precision specification value is the value achieved after fixing rails (it is not the value measured before the rails are bolted down).
For values, see . P.413

No Motor Bracket Type

* For the details regarding mounting parts, see P.427.

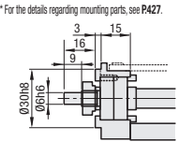

Part Number High Grade	Part Number * Precision Grade	Block Qty.	Motor Adapter Plates	Base Length (L)	Mounting Hole Dimensions A	P1	P2	B	Number of Pitches	Number of Holes (N)
(Standard Grease) LX3005(C) LX3010(C)	(Standard Grease) LX3005(C)P LX3010(C)P	Long Blocks (1 pc.)B1 (2 pcs.)B2 For B2, L≥300	(Servo Motor) A3038 A3040 E3040	125	12.5	-	100	12.5	1	4
				150	25			25		
				200	50	100		50		
(Low Dust Generation Grease) LX3005(C)G LX3010(C)G	(Low Dust Generation Grease) LX3005(C)PG LX3010(C)PG		(Stepping Motor) T3042 T3056.4 T3060	250			50		2	6
				300			100			
		Short Blocks (1 pc.)S1 (2 pcs.)S2 *Lubrication Units MX-equipped types are available in B1/S1 only.		350			50		3	8
				400			100			
(Lubrication Unit MX-equipped / Standard Grease) LX3005(C)-MX LX3010(C)-MX	(Lubrication Unit MX-equipped / Standard Grease) LX3005(C)P-MX LX3010(C)P-MX		*(No Adapter Plate) N	450			50		4	10
				500			100			
			(No Motor Bracket) F	550			50		5	12
				600			100			

* Precision Certificate is enclosed with precision grade products. * (C) is for Cover Type.
* Motor adapter plate and mounting screws are not included with No Adapter Plate Type.

Servo Motor Application Table

Part Number	Flange Size	Manufacturer	Wattage
A3038	□38	Panasonic	50W/100W
E3040	□40	SIEMENS	
A3040		Yasukawa Electric Corporation	
		Mitsubishi Electric Corporation	
		Keyence Corporation	
		Omron Corporation	
		Sanyo Denki Co., Ltd.	30W/50W/100W

Shaft insertion length into the coupling will be 1.15mm shorter on each side when used with Siemens motor.
For details on supported motor types and detailed diagram of Motor Adapter Plates, see P.427.

Stepping Motor Application Table

Part Number	Flange Size	Manufacturer	Type
T3042	□42	Oriental Motor	2-phase / 5-phase / α-Step
T3060	□60		
T3056.4	□56.4		2-phase
		NEMA standards	-

NEMA standards is a set of standards stipulated by National Electrical Manufacturers Association of United States.
For details on supported motor types and detailed diagram of Motor Adapter Plates, see . P.427

Effective Stroke, Total Mass

Base Length (L)	* Effective Stroke MX-unequipped B1	B2	S1	S2	MX-equipped B1	S1	Total Mass (kg) Standard B1	B2	S1	S2	Cover B1	B2	S1	S2
125	29	-	54.5	-	-	-	1.30	-	1.18	-	1.75	-	1.50	-
150	54	-	79.5	17	-	65.5	1.47	-	1.35	1.53	1.92	-	1.67	1.98
200	104	-	129.5	67	90	115.5	1.81	-	1.68	1.86	2.25	-	2	2.32
250	154	-	179.5	117	140	165.5	2.14	-	2.02	2.2	2.59	-	2.34	2.66
300	204	116	229.5	167	190	215.5	2.48	2.79	2.35	2.53	2.92	3.49	2.67	2.99
350	254	166	279.5	217	240	265.5	2.81	3.12	2.69	2.87	3.26	3.83	3.01	3.33
400	304	216	329.5	267	290	315.5	3.15	3.46	3.02	3.21	3.6	4.16	3.35	3.66
450	354	266	379.5	317	340	365.5	3.49	3.79	3.36	3.54	3.93	4.5	3.68	4
500	404	316	429.5	367	390	415.5	3.82	4.13	3.7	3.88	4.27	4.83	4.02	4.33
550	454	366	479.5	417	440	465.5	4.16	4.47	4.03	4.21	4.6	5.17	4.35	4.67
600	504	416	529.5	467	490	515.5	4.49	4.8	4.37	4.55	4.94	5.51	4.69	5.01

* Effective stroke is indicated in dimensions with a margin of 2.5mm each from the ends. 0.011kg will be added to MX-equipped types.

Accuracy Standards

Accuracy Standards	L≤400 High Grade	L≤400 Precision Grade	L≥450 High Grade	L≥450 Precision Grade
Positioning (mm)	0.06	0.02	0.1	0.025
Backlash (mm)	0.02	0.003	0.02	0.003
Positioning Repeatability (mm)	±0.005	±0.003	±0.005	±0.003
Running Parallelism (mm)	0.025	0.01	0.035	0.015
Starting Torque (N · cm)	4			

For Max. Velocity, see P.413.
For Moment of Inertia, see P.412.

Ordering Example

Part Number	-	Block Qty.	-	Motor Adapter Plates	-	Base Length (L)
LX3010C	-	B1	-	A3040	-	600
LX3010-MX	-	B1	-	A3040	-	600

Lubrication Unit MX-equipped

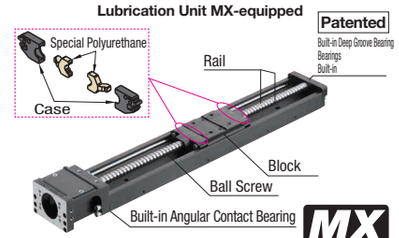

Patented
Built-in Deep Groove Bearing
Bearings
Built-in

MX Maintenance Free

Provides long term maintenance-free operation.
For details, see P.408.

Unit price for Precision Grade / Low Particle Generation Grease Option / Lubrication Unit MX-equipped

Specifications	Unit Price
Precision Grade	
Low Dust Generation Grease	
Lubrication Unit MX-equipped	

Listed Price + Unit Price = Product Price
Volume Discount Rate is applicable.

High Grade Unit Price

Part Number	L=125 (Lead 5 only)	L=150	L=200	L=250	L=300	L=350	L=400	L=450	L=500	L=550	L=600	Motor Adapter Plates	Block Qty.	Screw Shaft Dia.	Lead
LX30□□-B1/S1-□												Servo Stepping No Adapter Stepping No Adapter Plate	1	10	5
LX30□□-B2/S2-□	-												2		
LX30□□-B1/S1-F												No Bracket	1		10
LX30□□-B2/S2-F	-												2		
LX30□□C-B1/S1-□												Servo Stepping No Adapter Stepping No Adapter Plate	1	10	5
LX30□□C-B2/S2-□	-												2		
LX30□□C-B1/S1-F												No Bracket	1		10
LX30□□C-B2/S2-F	-												2		

LX30□□(C) Series sensor set can be specified as an alteration. For Detailed alteration diagram, see P.428.