Slide Rails

Heavy Load, Steel

Load Rating: 355N~843N/2 pcs.

■**Features**: Lockable slide rails in full open state. See App. Example **P.630**.

■**Steel, Three-Step**

RoHS10

SRR36 (Lock Mechanism Type)

Rail Disassembly: **Possible**

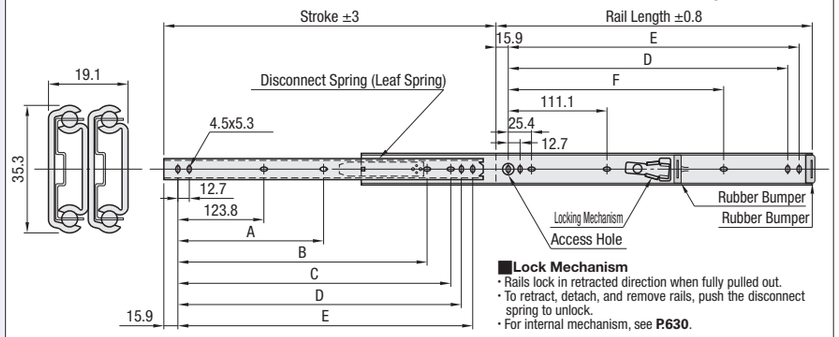

■**Lock Mechanism**
- Rails lock in retracted direction when fully pulled out.
- To retract, detach, and remove rails, push the disconnect spring to unlock.
- For internal mechanism, see **P.630**.

M Material: Steel S Surface Treatment: Bright Chromate (Trivalent Chromium)

Part Number Type	No.	Rail Length	Stroke	A	B	C	D	E	F	Load Rating (N/2 pcs.)	Unit Price 1 ~ 5 pc(s).	Volume Discount Rate 6 ~ 20 pcs
SRR36	12	305	327.2	-	-	-	260.3	273	-	623		
	14	356	377.9	-	-	298.4	311.1	323.8	-	586		
	16	406	428.7	-	-	349.2	361.9	374.6	250.8	555		
	18	457	479.5	212.7	-	400	412.7	425.4	301.6	516		
	20	508	530.3	238.1	365.1	450.8	463.5	476.2	352.4	476		
	22	559	581.2	263.5	415.9	501.6	514.3	527	403.2	444		
	24	610	631.9	288.9	466.7	552.4	565.1	577.8	454	413		
	26	660	682.7	314.3	517.5	603.2	615.9	628.6	504.8	382		
	28	711	733.5	339.7	568.3	654	666.7	679.4	555.6	355		

For horizontal installation, the target value of load rating is 25% (Reference Value).
Use M4 Recessed Truss Machine Screws (**P.2-233**, **234**) or Recessed Binding Head Screws (**P.2-232**) to mount rails.

■**Features**: The rails are trivalent chrome coated steel. Economically priced slide rails compliant with RoHS regulations.

■**Steel, Three-Step**

RoHS10

SRH150
SRRH150 (Detachable)

Rail Disassembly:**Not Possible**

SRH150 Rails cannot be pulled apart.
SRRH150 can be pulled apart by pushing the disconnect spring.

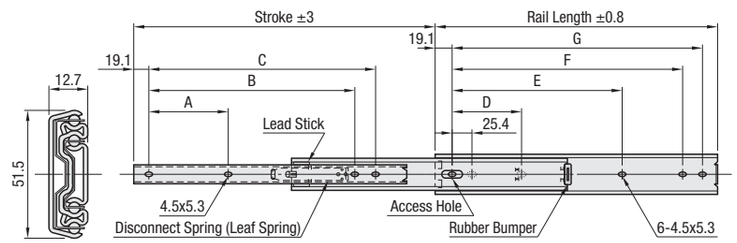

Drawing is for SRRH150 Type.

M Material: Steel
S Surface Treatment: Bright Chromate (Trivalent Chromium)

Part Number Type	No.	Rail Length	Stroke	SRH150 A	SRH150 B	SRRH150 A	SRRH150 B	C	D	E	F	G	Load Rating (N/2 pcs.)	SRH Unit Price 1 ~ 5 pc(s).	SRH Volume Discount Rate 6 ~ 20 pcs	SRRH Unit Price 1 ~ 5 pc(s).	SRRH Volume Discount Rate 6 ~ 20 pcs
SRH150 / SRRH150 (Detachable)	12	305	330.2	76.2	177.8	76.2	-	254	76.2	190.5	241.3	266.7	843				
	14	356	381	101.6	203.2	127	-	304.8	88.9	215.9	292.1	317.5	814				
	16	406	431.8	127	228.6	152.4	317.5	355.6	127	241.3	342.9	368.3	765				
	18	457	482.6	127	279.4	177.8	368.3	406.4	127	292.1	393.7	419.1	726				
	20	508	533.4	152.4	304.8	152.4	419.1	457.2	152.4	317.5	444.5	469.9	706				
	22	559	584.2	177.8	330.2	177.8	469.9	508	177.8	342.9	495.3	520.7	686				
	24	610	635	177.8	381	177.8	520.7	558.8	177.8	393.7	546.1	571.5	657				
	26	660	685.8	203.2	406.4	203.2	571.5	609.6	203.2	419.1	596.9	622.3	628				
	28	711	736.6	228.6	431.8	228.6	622.3	660.4	228.6	444.5	647.7	673.1	608				

For horizontal installation, the target value of load rating is 25% (Reference Value).
SRH150 Rails can not be pulled apart. SRRH150 can be pulled apart by pushing the disconnect spring. Use M4 Recessed Truss Machine Screws (**P.2-233**, **234**) or Recessed Binding Head Screws (**P.2-232**) to mount rails.

Ordering Example

Part Number
SRR3620
SRH15012
SRRH15028

Slide Rails

Heavy Load, Stainless Steel

Load Rating: 355N~1120N/2 pcs.

■**Features**: The rails are made of EN 1.4301 Equiv., which has excellent corrosion resistance. Lockable slide rails in full open state. See App. Example **P.630**.

■**Stainless Steel, Three-Step**

RoHS10

SSRR36
(Lock Mechanism Type)

Rail Disassembly: **Possible**

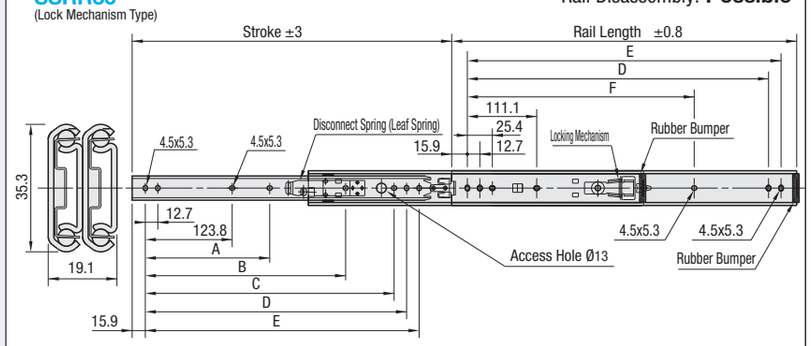

■**Lock Mechanism**
- Rails lock in retracted direction when fully pulled out.
- To retract, detach, and remove rails, push the disconnect spring to unlock.
- For internal mechanism, see **P.630**.

M Material: Rail: EN 1.4301 Equiv.
Ball: EN 1.4125 Equiv.

Part Number Type	No.	Rail Length	Stroke	A	B	C	D	E	F	Load Rating (N/2 pcs.)	Unit Price 1 ~ 5 pc(s).	Volume Discount Rate 6 ~ 20 pcs
SSRR36	30	300	322.3	-	-	-	255.5	268.2	-	623		
	35	350	372.3	-	-	292.8	305.5	318.2	-	586		
	40	400	422.3	-	-	342.8	355.5	368.2	244.4	555		
	45	450	472.3	205.5	-	392.8	405.5	418.2	294.4	516		
	50	500	522.3	230.5	357.1	442.8	455.5	468.2	344.4	475		
	55	550	572.3	255.5	407.1	492.8	505.5	518.2	394.4	444		
	60	600	622.3	280.5	457.1	542.8	555.5	568.2	444.4	413		
	65	650	672.3	305.5	507.1	592.8	605.5	618.2	494.4	382		
	70	700	722.3	330.5	557.1	642.8	655.5	668.2	544.4	355		

For horizontal installation, the target value of load rating is 25% (Reference Value).
Use M4 Recessed Truss Machine Screws (**P.2-186**) or Cross Recessed Pan Head Screws (**P.2-226**) to mount rails.

Example

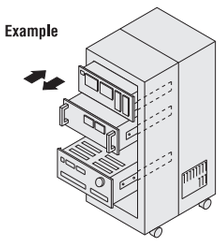

First, separate the rails and mount each rail on the installation units, then reattach the separated rails to the mounted rails.

■**Features**: The rails are made of EN 1.4301 Equiv., which has excellent corrosion resistance.

■**Stainless Steel, Two-Step**

RoHS10

SSRRH36

Rail Disassembly:**Not Possible**

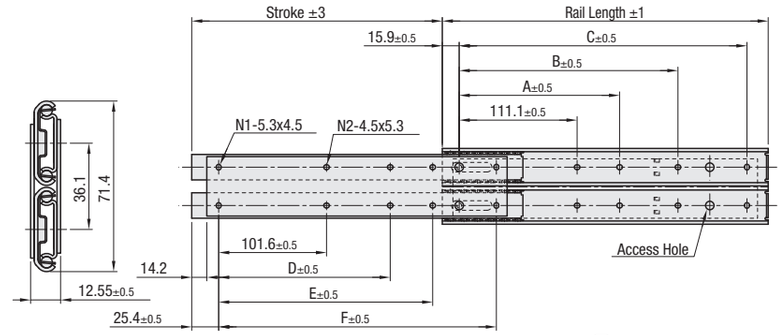

M Material: Rail: EN 1.4301 Equiv.
Ball: EN 1.4125 Equiv.

Part Number Type	No.	Rail Length	Stroke	A	B	C	D	E	F	Load Rating (N/2 pcs.)	Unit Price 1 ~ 5 pc(s).	Volume Discount Rate 6 ~ 20 pcs
SSRRH36	30	304.8	227	-	149.2	273	-	152.8	254.4	1120		
	35	355.6	278	-	200	323.8	-	203.6	305.2	1070		
	40	406.4	303	-	250.8	374.6	-	254.4	356.0	1020		
	45	457.2	354	212.7	301.6	425.4	203.2	305.2	406.8	1000		
	50	508	367	238.1	352.4	476.2	228.6	-	457.6	971		
	55	558.8	430	263.5	403.2	527.0	254	-	508.4	922		
	60	609.6	456	288.9	454.0	577.8	279.4	-	559.2	873		
	65	660.4	468	314.3	504.8	628.6	304.8	-	610.0	843		
	70	711.2	506	339.7	555.6	679.5	330.2	-	660.8	784		

For horizontal installation, the target value of load rating is 25% (Reference Value).
Use M4 Recessed Truss Machine Screws (**P.2-186**) or Cross Recessed Pan Head Screws (**P.2-226**) to mount rails.

Ordering Example

Part Number
SSRR3630
SSRRH3665