Conveyor Roller Shafts / Mini-Rollers for Conveyors

Roller Conveyors - Overview

Conveyor Roller Shafts

RoHS10

Type	M Material	S Surface Treatment
HRD	EN 1.1191 Equiv.	-
HRDB		Black Oxide
HRDM		Electroless Nickel Plating
HRDS	EN 1.4301 Equiv.	-

Applicable to Conveyor Rollers and Mini-Rollers on **P.1163**.

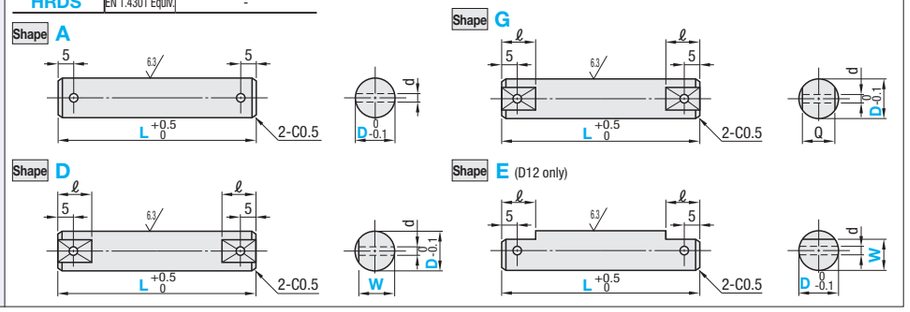

Part Number Type	Shape	D	L 1mm Increment	W Selection		Q	d	ℓ
HRD HRDB HRDM HRDS	A D G E	6	60~550	4	4.5	4	2.5	11
		8		5.8	6	6	2.5	12
		12		10		8	3	13

Ordering Example

Part Number						
Type	Shape	D	-	L	-	W
HRD	D	6	-	135	-	4.5

Unit Price = Body Price + Shape Charge

Part Number Type	D	Body Price 60~200	201~400	401~550	Config. Price (Body Price +) A	D	E	G
HRD	6						-	
	8						-	
	12							
HRDB	6						-	
	8						-	
	12							
HRDM	6						-	
	8						-	
	12							
HRDS	6						-	
	8						-	
	12							

Mini-Rollers for Conveyors

Type	M Material	S Surface Treatment	Bearing
CNMR	Steel	Trivalent Chromate Plating	Machined Bearing
CNMRC		Hard Chrome Plating	
CNMRS	Stainless Steel	-	

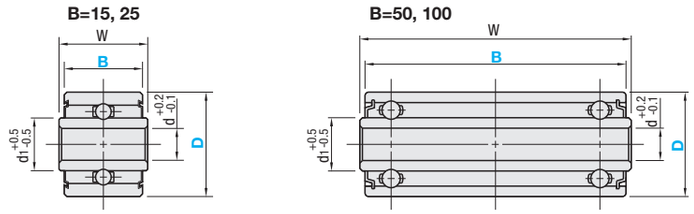

Part Number Type	D	B	d	d1 CNMR, CNMRS	d1 CNMRC	W	Allowable Load (N)	Unit Price CNMR	CNMRC	CNMRS
CNMR CNMRC CNMRS	20	15	6.1	9.2	10	17	294			
		25	6.1	9.2	10	27	392			
		50	6.2	10		52	490		-	-
		100	6.2	10		102	490		-	-

kgf=Nx0.101972

Use in combination with Conveyor Roller Shafts.

Ordering Example

Part Number		
CNMRC20	-	50

Selection Method of Roller Conveyors

①Selection of Roller Width

Select a roller width according to outer size of conveyed objects.

- Optimum width selection is "Object Width + 50mm or more".
- If the objects to be conveyed are on pallets, it is acceptable for the roller width to be narrower than the bottom surface width of the objects as long as the objects do not come into contact with the conveyor frame.

②Selection of roller pitch, material, and diameter

Select a roller width according to the bottom surface of conveyed objects as shown below.

Bottom of Conveyed Object	Min. Pitch Required	Material, Diameter
When the conveyed objects have hard bottoms: (Steel, Plastic, etc.)	3 Pitches (4 Rollers)	Select material and outer diameter from Table 1 according to Condition Formula "Table 1 Strength x 4 ≥Conveyed Object Weight"
When the conveyed objects have soft bottoms: (Cardboard, Rubber. etc.)	5 Pitches (6 Rollers)	Select material and outer diameter from Table 1 according to Condition Formula "Table 1 Strength x 6 ≥Conveyed Object Weight"

When impact is generated while loading, impact load is 1.5~3 times larger than the usual load. Please select the conveyor with sufficient load capacity.

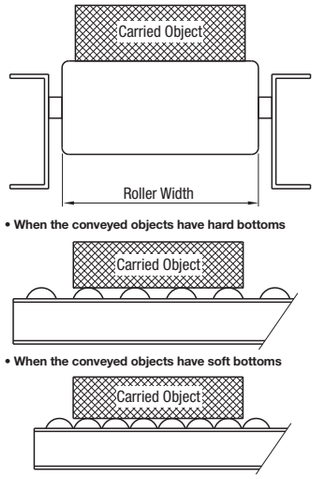

Table 1 : Strength per Roller

Roller Material	Roller Diameter	Roller Strength (N) W113	W213	W313	W413	W513
Plastic	20mm	113	105	98	90	83
	30mm	162	154	147	139	132
	50mm	314	304	294	289	279
Steel	19.1mm	618	530	343	294	206
	28.6mm	1236	1059	687	588	412
	38.1mm	1342	1342	922	785	588

Table 2 : Self Rolling Incline

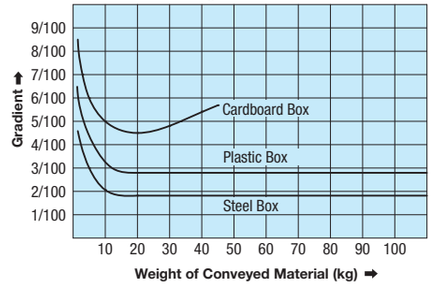

Conveyed Object Weight and Self Rolling Incline

See Table 2 for the movements of conveyed objects by own weight (self rolling incline) on inclined Conveyors.

[Frame Side View]

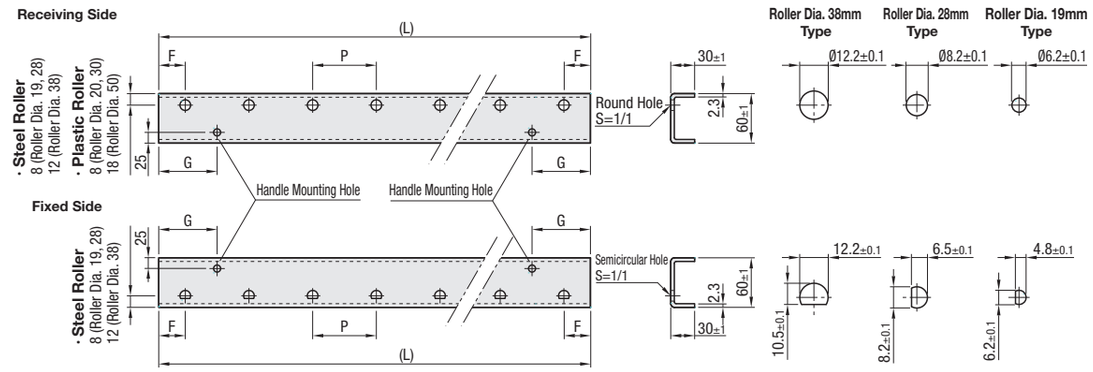

Resin Roller Conveyor

For Resin Roller Conveyors, the receiving and fixed side holes are round.

Type	ROCOP									
Frame Size	Ø20xP25		Ø30xP40		Ø30xP50		Ø50xP75		Ø50xP100	
(L)	F	G	F	G	F	G	F	G	F	G
100~199	10	22	17.5	37	22.5	40	35	75	47.5	97
200~299										
300~399										
400~499										
500~599										
600~699		97		11.7		97.5				
700~799										
800~899										
900~1000										
1001~1100										
1101~1200										
1201~1300										

Steel Roller Conveyor

Type	ROCO		ROCON		ROCOM		ROCOG		ROCOE ROCOJ		ROCOH	
Frame Size	Ø19xP20		Ø19xP30		Ø28xP30		Ø28xP50		Ø38xP50 Ø38xP100*		Ø38xP75	
(L)	F	G	F	G	F	G	F	G	F	G	F	G
100~199	10	20	20	35	-	-	-	-	-	-	-	-
200~299		40	10	55	25	70			25	50		
300~399		80	15	90	15	90	25	100		100	37.5	75
400~499		140	20	155	20	155					50	87.5
500~599			10	145	25	160		150		150	25	137.5
600~699			15	150	15	150					37.5	150
700~799			20	155	20	155					50	162.5
800~899			10	145	25	160					25	137.5
900~1000			15	150	15	150					37.5	150

* Holes for Roller Shafts are provided at 50mm pitch on Ø38 x P100 flames.