Conveyor Sensor Brackets / Post-Assembly Insertion Nuts

For Photoelectronic Sensors

Features: Conveyor Sensor Brackets with the sensor height, width, and angle adjustable.

Conveyor Sensor Brackets

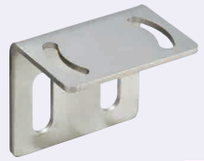

RoHS10

BFCB (Straight Slotted Hole Type)

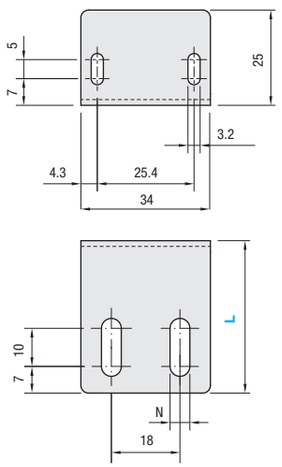

BFCBN (Arched Slotted Hole Type)

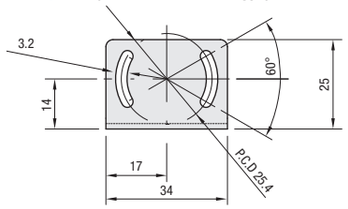

Ⓜ Material: Stainless Steel

Part Number			N	Unit Price
Type	L	No.		
Straight Slotted Hole Type **BFCB**	30	3	3.2	
		5	5.2	
		6	6.2	
	40	3	3.2	
		5	5.2	
		6	6.2	
Arched Slotted Hole Type **BFCBN**	30	3	3.2	
		5	5.2	
		6	6.2	
	40	3	3.2	
		5	5.2	
		6	6.2	

Sensor Compatibility Table

Manufacturer	Part Number
MISUMI	MZL-D, MZL-R, MZL-T, MZ-WD, MZ-LD, MZ-D
Keyence	PZ-G, PZ2, PZ-V/M Series
SUN	CX-L400, LS-H Series
OMRON	E3Z, E3ZM Series

Ordering Example

Part Number			
Type	L	-	No.
BFCB	40	-	5

Example

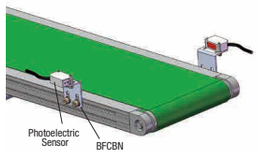

Features: Post-assembly insertion nuts with set screws.Useful for mounting items such as a sensor if you need to install them later.

Post-Assembly Insertion Nuts for Conveyor

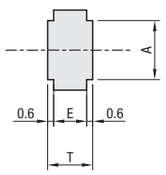

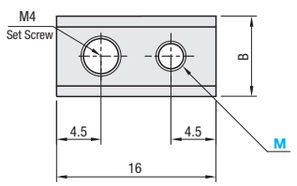

M	Reference Tightening Torque (N·m)
3	0.9
4	2.2
5	4.6

Use pre-assembly insertion nuts to mount heavy objects such as a stand.

Nuts dedicated for the aluminum extrusion of MISUMI conveyors. Use them for the aluminum extrusion slots (for M5 or M6).
See the Conveyor Main Unit pages and select an appropriate item.

Ⓜ Material: EN 1.4401 Equiv., Sintered

Part Number		Accessory (1 pc.)	A	B	E	T	Qty. per Pkg.	Unit Price	Volume Discount Rate
TYPE	M	Set Screw						1 pkg.	2~3 pkgs.
For Aluminum Extrusion Slot M5 **PACK-CHNT5**	3 4	M4x5	4.9	7	2.8	4	10 pcs.		
For Aluminum Extrusion Slot M6 **PACK-CHNT6**	3 4 5	M4x6	5.9	8	3.3	4.5			

Ordering Example

Part Number		
Type	-	M
PACK-CHNT6	-	5

Example

Position can be fixed with a nut alone by fastening the set screw included.

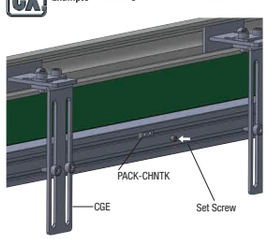

Conveyor Air Nozzle Stands

Features: Air Nozzle Stand to be attached to the conveyor. Several nozzles can be mounted on one stand.

Conveyor Air Nozzle Stands

RoHS10

Top Blow Type

CTT (Stainless Steel), **CTA** (Aluminum)

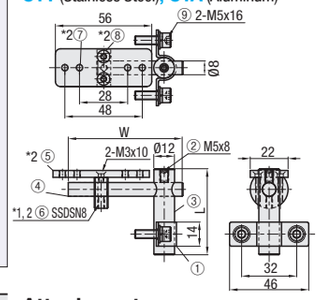

Side Blow Type

CSS (Stainless Steel), **CSA** (Aluminum)

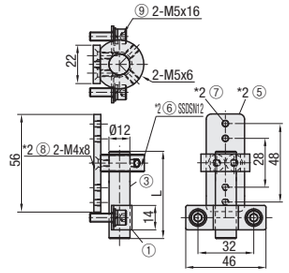

Attachment

NZTS (Stainless Steel), **NZTA** (Aluminum)

• **Flat Air Nozzle Compatible**

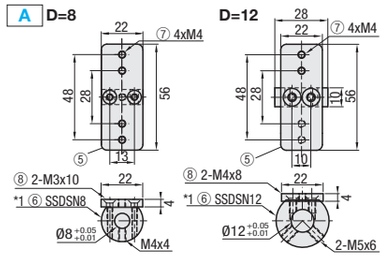

• **Compatible with Other Nozzles**

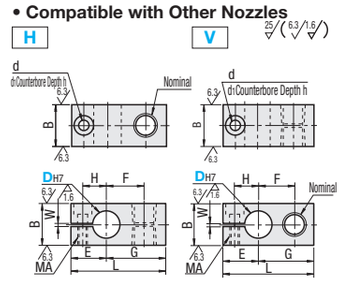

D	Nominal	B	L	E	G	H	F	MA	d	d1	h	W	Included Screw
8	M5	12	27	11	16	7	10	M3	3.5	6.5	3.5	1	SCB3- 8
12	Rc (PT) 1/8	18 (*19)	40	15	25	10	16	M4	4.5	8	4.5	1.5	SCB4-10

* For NZTS
Dio tolerance is measured before slitting.

Component List

Part No.	Part Name	Qty.	Ⓜ Material CTT CSS NZTS	Ⓜ Material CTA CSA NZTA
①	Mounting Bracket	2	EN 1.4301 Equiv.	
②	Shaft Set Screw	1	EN 1.4301 Equiv.	
③	Post	1	EN 1.4301 Equiv.	
④	Shaft	1	EN 1.4301 Equiv.	
⑤	Air Nozzle Mounting Plate	1	EN 1.4301 Equiv.	EN AW-6061 Equiv.*1
⑥	Shaft Collar	1	EN 1.4301 Equiv.	EN AW-6061 Equiv.*1
⑦	Air Nozzle Mounting Hex Socket Head Cap Screw	2	EN 1.4301 Equiv.	
⑧	Hex Socket Flat Head Cap Screw	2	EN 1.4301 Equiv.	
⑨	Hex Socket Head Cap Screw with Spring/Washer	4	EN 1.4301 Equiv.	
⑩	Nozzle Terminal	1	EN 1.4301 Equiv.	EN AW-6063 Equiv.*1

*1 ⑥ will be made of aluminum for CTA/CSA, but the dimensions will be same as SSDSN (P. 1-289).
*2 When the attachment H or V is selected, ⑩ will be attached instead of the part number ⑤, ⑥, ⑦, and ⑧.
*3 The aluminum surface is white anodized.
Either M5 or M6 screw can be used to mount fixing brackets.
When mounting several brackets with a top blow type, addition of a shaft as alteration is recommended.
When mounting several brackets with a side blow type, use of mounting 2 brackets is recommended.

Top Blow Type

Part Number				Unit Price			
Type	Attachment	L	W	CTTA	CTTH CTTV	CTAA	CTAH CTAV
CTT CTA	A H V	50	50				
			100				
			150				
			200				
			250				
			300				
		100	50				
			100				
			150				
			200				
			250				
			300				
		150	50				
			100				
			150				
			200				
			250				
			300				
		200	50				
			100				
			150				
			200				
			250				
			300				
		250	50				
			100				
			150				
			200				
			250				
			300				
		300	50				
			100				
			150				
			200				
			250				
			300				

Side Blow Type

Part Number			Unit Price			
Type	Attachment	L	CSSA	CSSH CSSV	CSAA	CSAH CSAV
CSS CSA	A H V	50				
		100				
		150				
		200				
		250				
		300				

Attachment

Part Number		Unit Quotation Price			
		NZTS		NZTA	
Type	D	No.			
		A	H, V	A	H, V
NZTS NZTA	8				
	12				

Air Nozzle Compatibility Table

Types	Attachment	Compatible Nozzle Type	Page	Nominal
Top Blow	A	AFTSP, AFTSF, AFTSA, AFTSS, AFTAD, AFTADA, AFTRW, AFTRSW	P2_1455~1460	-
	H V	PNZRF, ABNZL, ABNZN, ABNZMN, ABNZNL, ABNK, ABNX	P2_1465~1469	M5
Side Blow	H V	NZAK, NZAL, ALVA, ALVS, ARDADA, PNZRF, PNZCS, PNZCV, AFCS	P2_1463~1478	Rc (PT) 1/8
		AFTR, AFTRA, PNZRF, ACNA, ABNZ, ABNZM, ABNZL, ABNZML, ABNX		
		ABNKH, ABNXH, PNMC, PNMS, DKNZ, DKNZN, DKNZP, DKNZNP, SGPPN		
		SUTPN, FSGPPN, FSUTPN, SGPPW, SUTPW, FSUTPW, SLTWSLTR, SLTRS		
		NZRFS, NZRVFS, NZRCS, NZRS, NZRAJ		

The compatible nozzle types are listed in the order in which they appear in the catalog.

Ordering Example

Part Number					
Type	Attachment	-	L	-	W
CTT	A	-	300	-	100
CSS	H	-	200		

Part Number			
Type	D	-	No.
NZTS	12	-	H

Alterations

Part Number						
Type	Attachment	-	L	-	W	- (ADB)
CTT	S	-	50	-	300	- ADB

Altenations	Supporting Posts Added (Both Ends Supported) 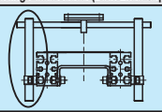
Code	ADB
Spec.	The Top Blow Type cantilever is changed to both ends supported. • Accessory ① Shaft of the same length as specified L dimension x 1 pc ② Mounting Bracket x 2 ③ Stainless Steel Hex Screw x 4 pcs.
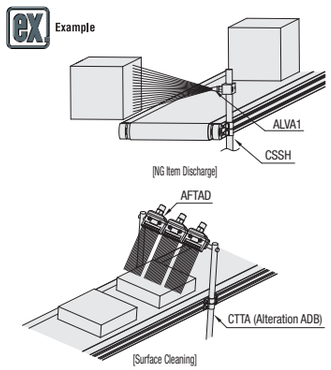
Example