Small Diameter Locating Pin

Straight

Features: Locating pins with Ø3 or less pin diameter. Selectable from 4 types of tip shape.

Material	Hardness	Type: L Selectable Flat	L Selectable Sphere	L Selectable Tapered	L Configurable Flat	L Configurable Sphere	L Configurable Taper R	L Configurable Tapered	L Configurable and Tolerance Selectable Flat	L Configurable and Tolerance Selectable Sphere	L Configurable and Tolerance Selectable Taper R	L Configurable and Tolerance Selectable Tapered
SK95 (ISO-TC90 Equiv.)	Treated Hardness: 50 ~ 58HRC	SFKT	SPKT	SXKT	SFST	SPST	STST	SXST	SFFPT	SPPT	STPT	SXFPT
*EN 1.4301 Equiv.	-	SFKS	SPKS	SXKS	SFSS	SPSS	STSS	SXSS	SFPS	SPPS	STPS	SXFPS
EN 1.4125 Equiv.	Treated Hardness: 50 ~ 55HRC	-	-	-	SFSXC	SPSXC	STSXC	SXSXC	SFPXC	SPPXC	STPXC	SXFPXC
EN 1.4301 Equiv. (SR Parts Polished)	-	-	-	-	-	SPSSG	-	-	-	-	-	-
EN 1.2344 Equiv. (SR Parts Polished)	Treated Hardness: 40 ~ 52HRC	-	-	-	-	SPSDG	-	-	-	-	-	-

Tip Shape Selectable

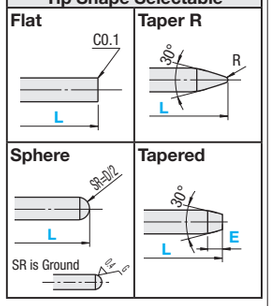

* For L Selectable Type, it is the EN 1.4301 Equiv. equivalent.

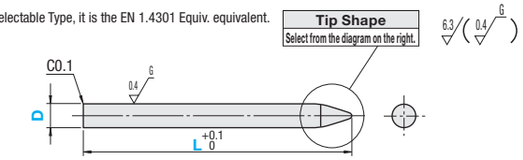

EN 1.4301 Equiv. may not be polished.

L Selectable

Part Number	D	d dim. Tolerance	L Selection	E
Flat SFKT SFKS / Sphere SPKT SPKS / Tapered SXKT SXKS	1	0 -0.005	3 4 5 6 10	0.5
	1.5		5 6 8	
	2		5 6 8 10 12 15	
	3		5 6 8 10 12 15	1

L Configurable

Part Number (Flat / Sphere / Taper R / Tapered)	D 0.1mm Increment	d dim. Tolerance	L 0.5mm Increment	E 0.5mm Increment	R
SFST SPST STST SXST / SFSS SPSS STSS SXSS / SFSXC SPSXC STSXC SXSXC / SPSSG SPSDG	1.0~2.0	0 -0.005	3.0~30.0	0.5~2.5	0.2
	2.1~3.0				0.4

For Taper R, L-1≥(Dx1.85)-(Rx2.75) For Tapered, L≥E+1 D≥E

L Configurable and Tolerance Selectable

Part Number Type (Flat / Sphere / Taper R / Tapered)	D Tolerance	D 0.01mm Increment	L 0.1mm Increment	E 0.5mm Increment	R
SFFPT SPPT STPT SXFPT / SFPS SPPS STPS SXFPS / SFPXC SPPXC STPXC SXFPXC	P +0.005 0	0.50~1.00	3.0~30.0	0.5~2.5	-
	Q ±0.002	1.01~2.00			0.2
	R 0 -0.005	2.01~3.00			0.4
	H 0 -0.01				

For Taper R, L-1≥(Dx1.85)-(Rx2.75) For Tapered, L≥E+1 D≥E

Ordering Example

L Selectable

Part Number - D - L
SPKS - D1 - L5

L Configurable

Part Number - D - L - E
SPST - D1.5 - L8.5 (Sphere)
SXST - D1.5 - L5.0 - E1.0 (Tapered)

L Configurable and Tolerance Selectable

Part Number / Type D Tol. - D - L - E
SPPT P - D0.55 - L5.0 (Sphere)
SXFPT P - D2.82 - L5.0 - E2.5 (Tapered)

Alterations

Part Number - D - L - E - (GDC, CC)
SFST - D2.0 - L10 - CC

Combination of GDC and CC is not available. Not applicable to L Selectable Type.

Alterations	Insertion Guide	C Chamfered Size
Code	GDC	CC
Spec.	Adds the insertion guide. Ordering Code GDC Insertion Guide D -0.01 -0.03 1 Machines one side only for Flat Type. Applicable when D≥2.1 and L≥5.0 for L Configurable Type. Applicable when D≥2.01 and L≥5.0 for L Configurable and Tolerance Selectable Type.	D dimension C chamfering 0.1 is changed to 0.3. Ordering Code CC C0.3 D≥1.5 is applicable to L Configurable Type. D≥1.50 is applicable to L Configurable and Tolerance Type.

L Selectable

D	Unit Price Flat SFKT	Flat SFKS	Sphere SPKT	Sphere SPKS	Tapered SXKT	Tapered SXKS
1						
1.5						
2						
3						

L Configurable

D	Unit Price Flat SFST	Flat SFSS	Flat SFSXC	Sphere SPST	Sphere SPSS	Sphere SPSXC	Sphere SPSSG	Sphere SPSDG	Taper R Type STST	Taper R Type STSS	Taper R Type STSXC	Tapered SXST	Tapered SXSS	Tapered SXSXC
1.0~2.0														
2.1~3.0														

L Configurable and Tolerance Selectable

D	Unit Price Flat SFFPT	Flat SFPS	Flat SFPXC	Sphere SPPT	Sphere SPPS	Sphere SPPXC	Taper R Type STPT	Taper R Type STPS	Taper R Type STPXC	Tapered SXFPT	Tapered SXFPS	Tapered SXFPXC
0.50~1.00			-			-	-	-	-	-	-	-
1.01~2.00												
2.01~3.00												

Small Diameter Locating Pin

Small Head

Small Head / Press Fit

Material	Hardness	Type: L Selectable Sphere	L Configurable Flat	L Configurable Sphere	L Configurable Taper R	L Configurable Tapered	L Configurable and Tolerance Selectable Flat	L Configurable and Tolerance Selectable Sphere	L Configurable and Tolerance Selectable Taper R	L Configurable and Tolerance Selectable Tapered
SK95 (ISO-TC90 Equiv.)	50~58HRC	SPKHT	SFSHT	SPSHT	STSHT	SXSHT	SFPHT	SPPHT	STPHT	SXPHT
EN 1.4301 Equiv.	-	SPKHS	SFSHS	SPSHS	STSHS	SXSHS	SFPHS	SPPHS	STPHS	SXPHS
EN 1.4125 Equiv.	50~55HRC	-	SFSHC	SPSHC	STSHC	SXSHC	SHPHC	SPPHC	STPHC	SXPHC
EN 1.2344 Equiv. (SR Parts Polished)	40~52HRC	-	-	SPSHDG	-	-	-	-	-	-
EN 1.4301 Equiv. (SR Parts Polished)	-	-	-	SPSHSG	-	-	-	-	-	-

Material code SG and DG are applicable to L Configurable Type of Sphere only.
L Selectable Type is applicable to Sphere only.

Tip Shape Selectable

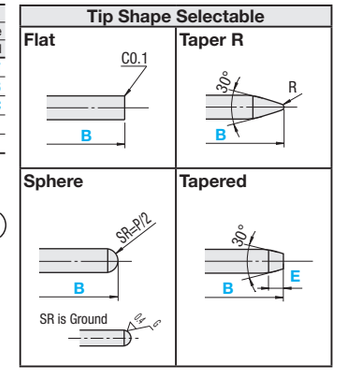

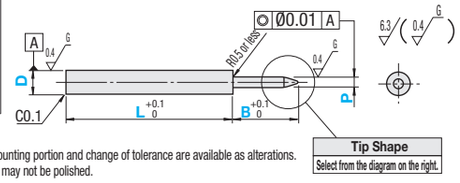

Chamfering of mounting portion and change of tolerance are available as alterations.
EN 1.4301 Equiv. may not be polished.

L Selectable

Part Number	D	D dim. Tolerance	L Selection	P	P Dim. Tolerance	B
SPKHT	2	0 -0.005	3 5 10	0.95	0 -0.01	2
SPKHS	3		3 8 10	1.95		4

L Configurable

Part Number (Flat / Sphere / Taper R / Tapered)	D 0.1mm Increment	d dim. Tolerance	L 0.5mm Increment	P 0.1mm Increment	P Dim. Tolerance	B 0.5mm Increment	E 0.5mm Increment	R
SFSHT SPSHT STSHT SXSHT / SFSHS SPSHS STSHS SXSHS / SFSHC SPSHC STSHC SXSHC / SPSHDG SPSHSG	1.0~2.0	0 -0.005	3.0~20.0	0.9~1.9 (D>P)	0 -0.01	1.5~10.0 (B-P/2≥1.0)	0.5~2.5	0.2
	2.1~3.0			1.9~2.9 (D>P)				0.4

For Taper R Type, B-1≥1.85P-2.75R For Tapered: B≥E+1, P≥E

L Configurable and Tolerance Selectable

Part Number Type (Flat / Sphere / Taper R / Tapered)	D Tolerance	P Tolerance	D 0.01mm Increment	L 0.1mm Increment	P 0.01mm Increment	B 0.1mm Increment	E 0.5mm Increment	R
SFPHT SPPHT STPHT SXPHT / SFPHS SPPHS STPHS SXPHS / SFPHC SPPHC STPHC SXPHC	P +0.005 0	P +0.005 0	0.51~1.00	3.0~20.0	0.50~0.99 (D>P)	1.5~5.0 (B-P/2≥1.0)	0.5~2.5	-
	Q ±0.002	Q ±0.002	1.01~2.00		0.50~1.99 (D>P)			0.2
	R 0 -0.005	R 0 -0.005	2.01~3.00		1.00~2.99 (D>P)	1.5~10.0 (B-P/2≥1.0)		0.4
	H 0 -0.01	H 0 -0.01						

For Taper R Type, B-1≥1.85P-2.75R For Tapered: B≥E+1, P≥E

Ordering Example

L Selectable

Part Number - D - L
SPKHT - D2 - L5

L Configurable

Part Number - D - L - P - B - E
SPSHS - D1.5 - L10.0 - P0.9 - B1.5 (Sphere)
SXSHT - D1.5 - L10.0 - P1.2 - B2.0 - E1.0 (Tapered)

L Configurable and Tolerance Selectable

Part Number / Type D Tolerance P Tolerance - D - L - P - B - E
SPPHT Q R - D1.50 - L10.1 - P0.95 - B5.3 (Sphere)
SXPHS P P - D1.50 - L10.0 - P1.20 - B3.0 - E1.0 (Tapered)

Alterations

Part Number - D - L - P - B - E - (GDC, CC)
SFSHT - D2.5 - L20 - P2.0 - B5.0 - GDC

Combination of GDC and CC is not available. Alterations are not applicable to L Selectable Type.

Alterations	Insertion Guide	C Chamfered Size
Code	GDC	CC
Spec.	Adds the insertion guide. Ordering Code GDC Insertion Guide D -0.01 -0.03 1 Applicable when D≥2.1 and L≥5.0 for L Configurable Type. Applicable when D≥2.01 and L≥5.0 for L Configurable and Tolerance Selectable Type.	D dimension C chamfering 0.1 is changed to 0.3. Ordering Code CC C0.3 D≥1.5 is applicable to L Configurable Type. D≥1.50 is applicable to L Configurable and Tolerance Type.

L Selectable

D	Unit Price Sphere SPKHT	Sphere SPKHS
2		
3		

L Configurable

D	Unit Price Flat SFSHT	Flat SFSHS	Flat SFSHC	Sphere SPSHT	Sphere SPSHS	Sphere SPSHSG	Sphere SPSHDG	Sphere SPSHC	Taper R Type STSHT	Taper R Type STSHS	Taper R Type STSHC	Tapered SXSHT	Tapered SXSHS	Tapered SXSHC
1.0~2.0														
2.1~3.0														

L Configurable and Tolerance Selectable

D	Unit Price Flat SFPHT	Flat SFPHS	Flat SFPHC	Sphere SPPHT	Sphere SPPHS	Sphere SPPHC	Taper R Type STPHT	Taper R Type STPHS	Taper R Type STPHC	Tapered SXPHT	Tapered SXPHS	Tapered SXPHC
0.51~1.00			-			-	-	-	-	-	-	-
1.01~2.00												
2.01~3.00												