# Indexing Plungers

## Coarse/Fine Thread Lever

**Features:** The pin can be operated by turning the lever making it useable in limited spaces.The pin is retractable in the body by 180° turn of the lever. The lever can be locked by the notch.

### Coarse Thread Lever

| Type | Screw | Lever | | Main Body | | Pin | | | Spring | Lock Nut | |
|---|---|---|---|---|---|---|---|---|---|---|---|
| | | M Material | S Surface Treatment | M Material | S Surface Treatment | M Material | H Hardness | S Surface Treatment | M Material | M Material | S Surface Treatment |
| PMXRB | Coarse Thread | EN 1.1191 Equiv. | Black Oxide | EN 1.1191 Equiv. | Black Oxide | EN 1.1191 Equiv. | 45HRC~ | Black Oxide | EN 1.4301 (WPB) Equiv. | JIS-SWCH | Black Oxide |
| PMXRM | | | Electroless Nickel Plating | | Electroless Nickel Plating | | | Electroless Nickel Plating | | | Electroless Nickel Plating |

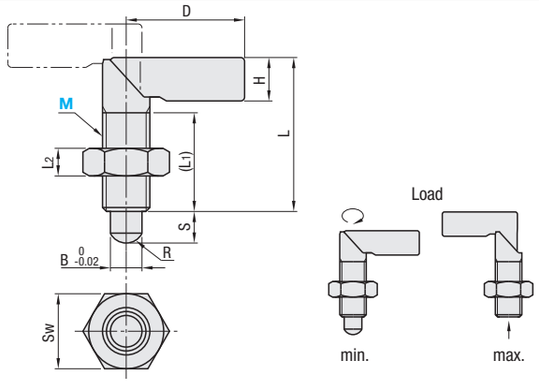


| Part Number Type | M | Pitch (Coarse Thread) | B | S | L | (L1) | D | H | L2 | Sw | R | Load (N) min. | Load (N) max. | Mass (g) | Unit Price PMXRB | Unit Price PMXRM |
|---|---|---|---|---|---|---|---|---|---|---|---|---|---|---|---|---|
| PMXRB | 10 | 1.5 | 5 | 5 | 34 | 20 | 24 | 8 | 6 | 17 | 3 | 5 | 9.5 | 22 | | |
| PMXRM | 12 | 1.75 | 6 | 6 | 39 | 25 | 30 | 11 | 7 | 19 | 3.5 | 8 | 13 | 33 | | |

kgf=Nx0.101972

Ordering Example — Part Number: PMXRB10

### Fine Thread Lever

| Type | Lever Cap | Main Body | | Pin | | | Spring | (Lock Nut) | |
|---|---|---|---|---|---|---|---|---|---|
| | M Material | M Material | S Surface Treatment | M Material | H Hardness | S Surface Treatment | M Material | M Material | S Surface Treatment |
| PXVB | Nylon 6 (Mat Black) | EN 1.0715 Equiv. | Black Oxide | EN 1.1191 Equiv. | 50~60HRC | Black Oxide | JIS-SWP-B | - | - |
| PXVBK | | | | | | | | EN 1.1191 Equiv. | Black Oxide |
| SPXVB | | EN 1.4305 Equiv. | - | EN 1.4305 Equiv. | - | Nickel Plating | EN 1.4319 Equiv. | - | - |
| SPXVBK | | | | | | | | EN 1.4305 Equiv. | - |

PXVB
SPXVB

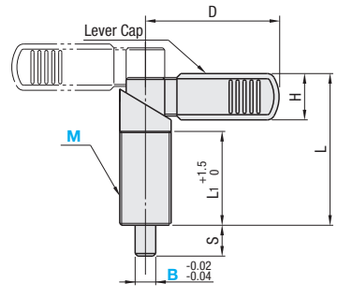


With Lock Nut
PXVBK
SPXVBK

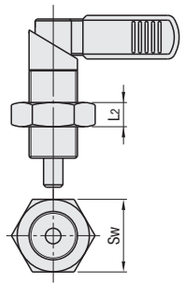


| Part Number Type | M | Pitch (Fine Thread) | B (Selection) | S | L | L1 | D | H | L2 | Sw | Unit Price PXVB | Unit Price PXVBK | Unit Price SPXVB | Unit Price SPXVBK |
|---|---|---|---|---|---|---|---|---|---|---|---|---|---|---|
| (Steel) PXVB / (Stainless Steel) SPXVB | 16 | 1.5 | 6 8 10 | 10 | 47 | 30 | 42 | 15.5 | 8 | 24 | | | | |
| PXVBK / SPXVBK | 20 | 1.5 | 8 10 12 | 12 | 59 | 36 | 52 | 19 | 10 | 30 | | | | |

Ordering Example — Part Number - B
PXVB16 - 8
SPXVBK20 - 12

**Mass and Load**

| M | B | Mass (g) | Load (N) min. | Load (N) max. |
|---|---|---|---|---|
| 16 | 6 | 79 | 12 | 32 |
| | 8 | 80 | | |
| | 10 | 82 | | |
| 20 | 8 | 112 | 21 | 58 |
| | 10 | 115 | | |
| | 12 | 118 | | |

kgf=Nx0.101972

# Indexing Plungers

## Switch Lever Type / Push Type / Plate Mount Type

**Features:** The ON/OFF state can be visually recognized by the indication on the lever.

### Switch Lever Type

| Type | Thread Type | Lever | | Main Body | | Pin | | | Spring | Lock Nut | |
|---|---|---|---|---|---|---|---|---|---|---|---|
| | | M Material | S Surface Treatment | M Material | S Surface Treatment | M Material | H Hardness | S Surface Treatment | M Material | M Material | S Surface Treatment |
| PMXSR | Coarse Thread | EN 1.1191 Equiv. | Black Oxide | EN 1.0038 Equiv. | Black Oxide | EN 1.1191 Equiv. | HV500~600 | Black Oxide | EN 1.4301 (WPB) Equiv. | EN 1.0038 Equiv. | Black Oxide |
| PXSR | Fine Thread | | | | | | | | | | |

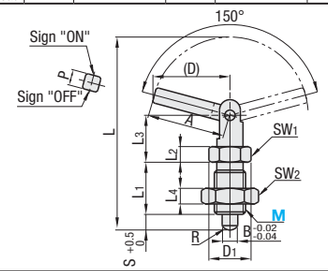


| Part Number Type | M | Pitch (Coarse Thread) | Pitch (Fine Thread) | (D) | D1 | S | B | L | L1 | L2 | L3 | L4 | SW1 | SW2 | A | P | R | Load (N) min. | Load (N) max. | Unit Price PMXSR | Unit Price PXSR |
|---|---|---|---|---|---|---|---|---|---|---|---|---|---|---|---|---|---|---|---|---|---|
| PMXSR (Coarse Thread) / PXSR (Fine Thread) | 12 | 1.75 | 1.5 | 30 | 16.1 | 6 | 6 | 74 | 20 | 6 | 18 | 7 | 14 | 19 | 30 | 6 | 3.5 | 12.0 | 26.0 | | |
| | 16 | 2 | 1.5 | 40.5 | 21.9 | 8 | 8 | 99.9 | 26 | 8 | 24.9 | 10 | 19 | 24 | 41 | 8 | 4.5 | 18.0 | 39.0 | | |
| | 20 | 2.5 | 1.5 | 49.5 | 27.7 | 10 | 10 | 123 | 33 | 10 | 30 | 12 | 24 | 30 | 50 | 10 | 6 | 27.0 | 58.5 | | |

Ordering Example — Part Number: PXSR12

### Push Type

| Type | Screw | Button | Shaft | Main Body 1 | | Main Body 2 | Pin | | | Spring | Lock Nut | |
|---|---|---|---|---|---|---|---|---|---|---|---|---|
| | | M Material | M Material | M Material | S Surface Treatment | M Material | M Material | H Hardness | S Surface Treatment | M Material | M Material | S Surface Treatment |
| PMXPB | Coarse Thread | Nylon 6 (Black) | Polyacetal (White) | EN 1.1191 Equiv. | Black Oxide | Nylon 6 (Black) | EN 1.1191 Equiv. | HV500~600 | Black Oxide | EN 1.4301 (WPB) Equiv. | JIS-SWCH | Black Oxide |
| PMXPM | | | | | Electroless Nickel Plating | | | | Electroless Nickel Plating | | EN 1.4301 Equiv. | - |

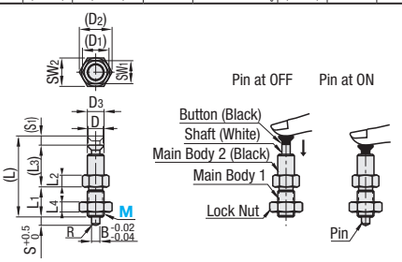


**Features**
One finger operation is possible, which significantly reduce work area in the upper part of the button. Push the button to turn the status "ON" (button color is black); push it again to return the status to "OFF" (button color is black and white).

| Part Number Type | M | Pitch (Coarse Thread) | D | (D1) | (D2) | D3 | S | B | (L) | L1 | L2 | (L3) | L4 | (S1) | SW1 | SW2 | R | Load (N) min. | Load (N) max. | Unit Price PMXPB | Unit Price PMXPM |
|---|---|---|---|---|---|---|---|---|---|---|---|---|---|---|---|---|---|---|---|---|---|
| PMXPB / PMXPM | 10 | 1.5 | 9 | 16.1 | 19.6 | 10 | 5 | 5 | 47.5 | 18 | 7 | 24 | 6 | 5.5 | 14 | 17 | 3 | 2.2 | 3.0 | | |
| | 12 | 1.75 | 11 | 19.6 | 21.9 | 12 | 6 | 6 | 53 | 20 | 7 | 26.5 | 7 | 6.5 | 17 | 19 | 3.5 | 2.0 | 3.9 | | |
| | 16 | 2 | 15 | 24.3 | 27.7 | 16 | 8 | 8 | 68 | 25 | 8 | 34.5 | 10 | 8.5 | 21 | 24 | 4.5 | 1.3 | 5.4 | | |

Ordering Example — Part Number: PMXPB10

### Plate Mount Type

| Type | Knob | Main Body | | Pin | | | Spring |
|---|---|---|---|---|---|---|---|
| | M Material | M Material | S Surface Treatment | M Material | H Hardness | S Surface Treatment | M Material |
| PXSP / PXSPL | Polyacetal | EN 1.1191 Equiv. | Black Oxide | EN 1.1191 Equiv. | 50~60HRC (Carburized) | Black Oxide | EN 1.4568 Equiv. |

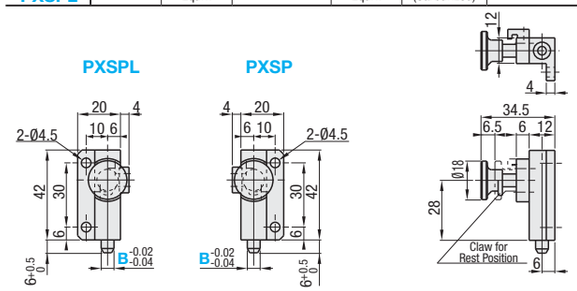


Can be effectively used in the places with limited headroom.

| Part Number Type | B | Load (N) min. | Load (N) max. | Unit Price |
|---|---|---|---|---|
| PXSP / PXSPL | 6 | 0.1 | 1.9 | |

Ordering Example — Part Number: PXSP6