[High Precision] Rotary Stages
Coarse Feed / Feed Screw

Features: Suitable for large angle positioning applications such as LED lighting and sensor positioning.

Rotary Stages, Coarse Feed

RoHS10

REG25

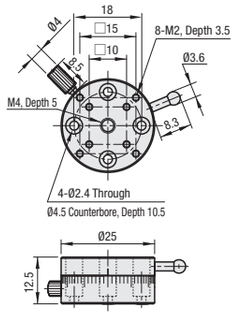

REG40

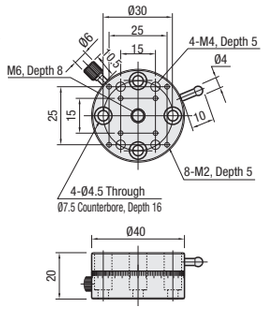

REG60

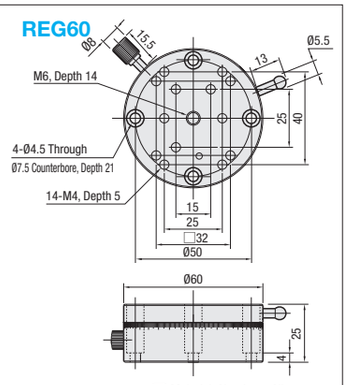

M Material: Aluminum Alloy
S Surface Treatment: Black Anodize

Part Number Type	Part Number No.	Stage Surface (mm)	Travel Distance	Resolution	Load Capacity (N) Horizontal	Load Capacity (N) Vertical	Eccentricity (mm)	Weight (kg)	Accessory (4 pcs.) Type M-L	Unit Price
REG	25	Ø25	Coarse 360°	5°	29.4	9.8	0.05	0.02	SCB2-5	
	40	Ø40		2°	49.0	16.3		0.06	SCB4-8	
	60	Ø60		1°	68.6	22.8		0.20	SCB4-8	

⊗REG25 can not be combined with other stages.
XWG (**P.1904**), XYWG (**P.1939**), ZWG (**P.1954**), XLWG (**P.1908**), ZLWG (**P.1956** (REG60 requires XPLT60 on **P.1915**)).

Ordering Example — Part Number: REG40

Features: Small Ø24 diameter rotary stage capable of fine screw feeds.

Rotary Stages, Feed Screw

RoHS10

RPGE25

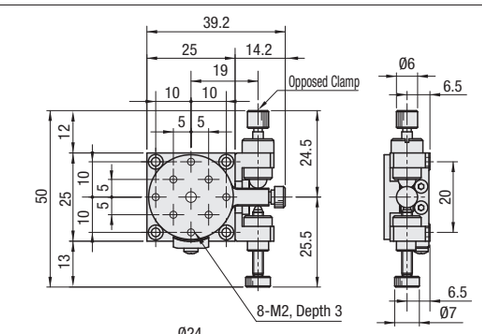

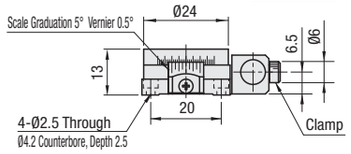

M Material: Aluminum Alloy
S Surface Treatment: Black Anodize

Part Number Type	Part Number No.	Stage Surface (mm)	Travel Distance	Resolution Vernier	Load Capacity (N) Horizontal	Eccentricity (mm)	Weight (kg)	Accessory (4 pcs.) TypeM-L	Unit Price
RPGE	25	Ø24	Coarse 360° Fine Feed ±3°	0.5°	9.8	0.05	0.03	SCB2-6	

Ordering Example — Part Number: RPGE25

Alteration	Feed Knob Position Change
Spec.	Side Mount - Right/Left Reversed 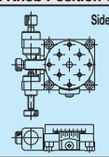
Code	NR

Alterations — Part Number - (NR)
RPGE25 - NR

[High Precision] Rotary Stages
Micrometer Head

Features: Micrometer equipped rotary stages capable of fine feeds.

Rotary Stages, Micrometer Head

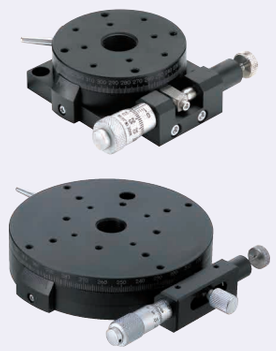

RoHS10

RPG38

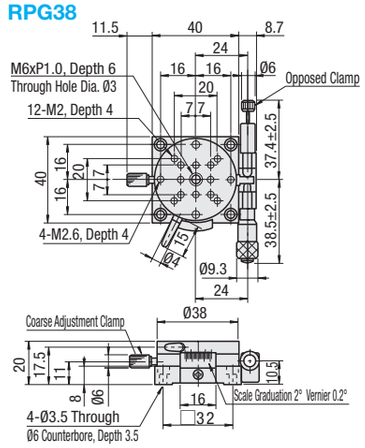

RPG60

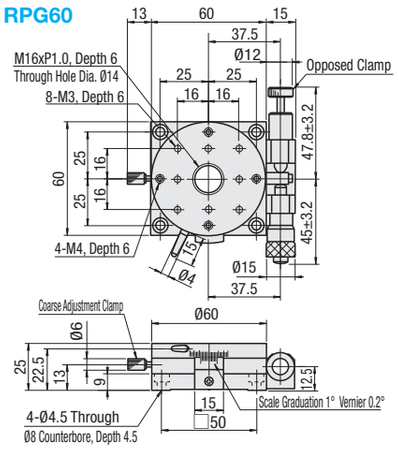

RPG85

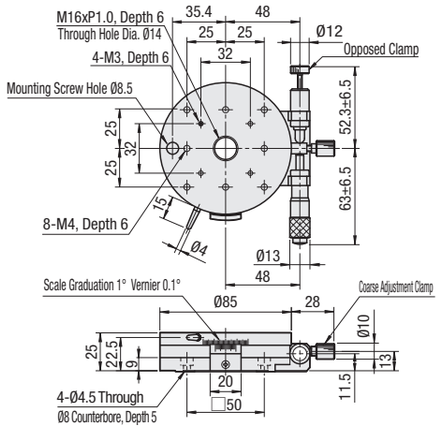

RPG110

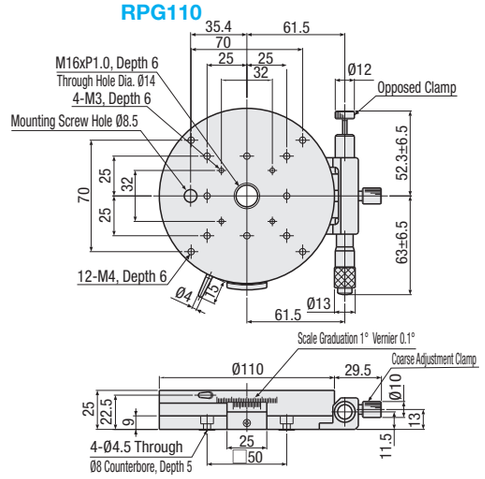

M Material: Aluminum Alloy
S Surface Treatment: Black Anodize

Standard Stage Similar Products: RTRS (**P.1979**), RTRM (**P.1979**) (available for limited sizes only).

Part Number Type	Part Number No.	Stage Surface (mm)	Travel Distance	Resolution Vernier	Resolution Micrometer	Load Capacity (N) Horizontal	Moment Load Capacity (N, m)	Moment Rigidity ("/N, cm)	Eccentricity (mm)	Weight (kg)	Accessory (4 pcs.) TypeM-L	Unit Price
RPG	38	Ø38	Coarse 360° Fine Feed ±5°	0.2°	≈1'26"/Scale Graduation	9.8	0.3	3.56	0.05	0.09	SCB3-8	
	60	Ø60			≈55"/Scale Graduation	29.4	0.7	0.41		0.28	SCB4-10	
	85	Ø85		0.1°	≈43"/Scale Graduation	39.2	1.2	0.22		0.48	SCB4-8	
	110	Ø110			≈34"/Scale Graduation	49.0	1.5	0.17		0.75	SCB4-8	

Knob Cover HDCVR13 (Sold Separately): Ø13 micrometer knob can be increased in diameter by installing the cover. **P.2004**
Extension Cover HDEXT13 (Sold Separately): Ø13 micrometer head knob can be extended. **P.2004**
Coarse Clamps and Opposed Clamps are available for sale as special order items. Contact our customer service.

Ordering Example — Part Number: RPG38

Alteration	Micrometer Position
Spec.	Side Mount - Right/Left Reversed 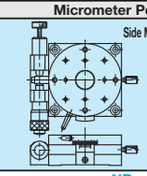
Code	NR

Alterations — Part Number - (NR)
RPG60 - NR

Mounting dimensions of micrometer head and clamp are different from those of standard products.
See the CAD data for details.