Strut Clamps

Equal Dia. / Unequal Dia. / Equal Dia. T, Perpendicular Split

Features: Post-assembly mounting onto Posts for Stands in structures.

Equal Dia., Perpendicular Configuration, Split

Unequal Dia., Perpendicular Configuration, Split

RoHS10

Type: Equal Dia., Perpendicular Configuration	Type: Unequal Dia., Perpendicular Configuration	M Material	S Surface Treatment	A Accessory
KSBC	KSLC	EN 1.0038 Equiv.	Black Oxide	Hex Socket Head Cap Screw
MSBC	MSLC		Electroless Nickel Plating	Hex Socket Head Cap Screw (Stainless Steel)
ASBC	ASLC	EN AW-6063 Equiv.	Black Anodize	Hex Socket Head Cap Screw
SSBC	SSLC	EN 1.4301 Equiv.	-	Hex Socket Head Cap Screw (Stainless Steel)

CB screws are included with the black oxide and black anodized products, and SCB screws are included with the other products.

Equal Dia., Perpendicular Configuration

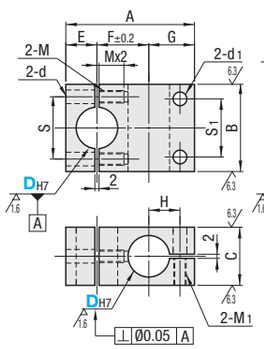

Unequal Dia., Perpendicular Configuration

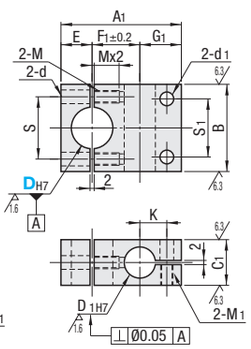

Part Number Type	DH7		A	A1	B	C	C1	D1H7		E	F	F1	G	G1	H	K	S	d	M (Coarse)	S1	d1	M1 (Coarse)
Equal Dia., Perpendicular Configuration KSBC MSBC ASBC SSBC	8	+0.015 0	34	-	25	12	-	-		8	13	-	13	-	8	-	16	4.5	M4	15	4.5	M4
	10		37	35		16	12	8	+0.015 0		15	14	14	13	9	8	17			16	5.5	M5
	12	+0.018 0	42	41	28		16	10		10	17	16	15	15	10	9	20			18		
	15		51	45	32	22	18			12	21	18	18		12		23	5.5	M5	22		
Unequal Dia., Perpendicular Configuration (D≥10) KSLC MSLC ASLC SSLC	20	+0.021 0	62	58	40	28	22	15	+0.018 0	15	25	23	22	20	15	13	29	6.6	M6	28	6.6	M6
	25		76	66	45	32	25			18	33	28	25		18		34			30		
	30		89	79	60	40	30	20	+0.021 0	23	37	32	29	24	21	16	44	9	M8	40	9	M8
	35	+0.025 0	101	92	65	45	35	25		26	43	39	32	27	24	19	50			45		

For the available sizes, refer to the price list. Unequal Dia., Perpendicular Configuration Type is available for the size larger than D10.
The tolerance and perpendicularity of DH7 and D1H7 are the tolerances before slitting.
Recommended tolerances of mating shafts for D1: g6, f8.

Ordering Example

Part Number
KSBC15
MSLC30

Alterations

Part Number	-	(ALW)
ASBC15	-	ALW

Alteration	Code	Spec.
Clear Anodize	ALW	Changes ASBC and ASLC from black anodize to clear anodize. Applicable to ASBC and ASLC. Stainless steel screws are included.

Example

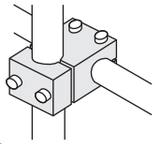

Included Screw

D	Included Screw
8	M4-15/M4-10, 2 pcs. each
10	M4-15/M5-15, 2 pcs. each
12	M4-18/M5-15, 2 pcs. each
15	M5-20/M5-20, 2 pcs. each
20	M6-25/M6-25, 2 pcs. each
25	M6-30/M6-25, 2 pcs. each
30	M8-35/M8-35, 2 pcs. each
35	M8-40/M8-40, 2 pcs. each

D1 side screws included with Unequal Dia., Perpendicular Configuration Type are shorter than listed above.

D	Unit Price: Equal Dia., Perpendicular Configuration KSBC	MSBC	ASBC	SSBC	Unequal Dia., Perpendicular Configuration KSLC	MSLC	ASLC	SSLC
8					-	-	-	-
10						-		
12								
15								
20								
25								
30								
35			-	-				

Equal Dia., Perpendicular Configuration, Split, T-Shaped

RoHS10

Type	M Material	S Surface Treatment	A Accessory
KLTTS	EN 1.0038 Equiv.	Black Oxide	Hex Socket Head Cap Screw
MLTTS		Electroless Nickel Plating	
ALTTS	EN AW-6063 Equiv.	Black Anodize	
SLTTS	EN 1.4301 Equiv.	-	

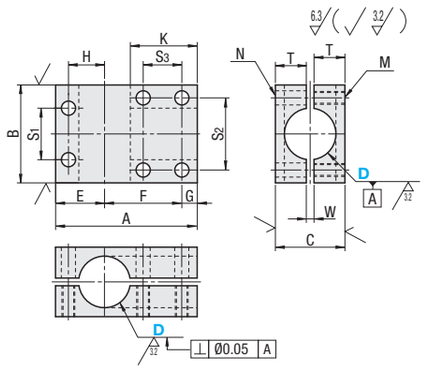

Part Number Type	D	A	B	C	E	F	G	H	K	M (Coarse)	N	S1	S2	S3	T	W	Unit Price KLTTS	MLTTS	ALTTS	SLTTS
KLTTS MLTTS ALTTS SLTTS	10	35	25	17	14	13	8	9	16	M5	5.5	15	16.5	-	8	1				
	12	40	32	19	15	16	9	10	19			16	20		9					
	15	50		22	16	28	6	11	26.5			18	22	15	10	2				
	20	55	38	27	19	30		14	26			20	28		12	3				
	25	65	44	35	22	37		17	30.5			22	34	18	16					-
	30	75	50	41	25	44		20	35			26	40	20	19				-	-

The perpendicularity is the tolerance before slitting. For the available sizes, refer to the price list.
For mating, g6, f8 shaft tolerances are recommended. Tightening with a long wrench is recommended.

Example

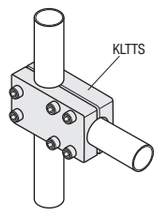

One Point

Temporary tighten the screws in order of ① to ⑥ before final tightening.
(If the shaft on one side is fully tightened first, tightening the other shaft may become difficult.)

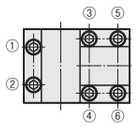

Included Screw

D	KLTTS ALTTS	MLTTS SLTTS
10	CB5-16, 4 pcs.	SCB5-16, 4 pcs.
12	CB5-18, 4 pcs.	SCB5-18, 4 pcs.
15	CB5-20, 6 pcs.	SCB5-20, 6 pcs.
20	CB5-25, 6 pcs.	SCB5-25, 6 pcs.
25	CB5-30, 6 pcs.	SCB5-30, 6 pcs.
30	CB5-35, 6 pcs.	SCB5-35, 6 pcs.

Strut Clamps

Equal/Unequal Dia., Parallel Holes, Pitch Selectable

Features: Two Posts for Stands fixable in parallel.

Equal Dia., Parallel Holes, Pitch Selectable

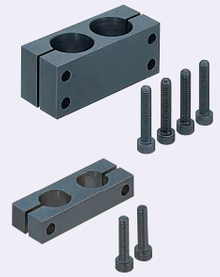

RoHS10

Type: Standard	Type: Thin	M Material	S Surface Treatment	A Accessory
KKP	KKPT	EN 1.0038 Equiv.	Black Oxide	Hex Socket Head Cap Screw
MKP	-		Electroless Nickel Plating	Hex Socket Head Cap Screw (Stainless Steel)
AKP	-	EN AW-6063 Equiv.	Black Anodize	Hex Socket Head Cap Screw
SKP	-	EN 1.4301 Equiv.	-	Hex Socket Head Cap Screw (Stainless Steel)

D=8~12

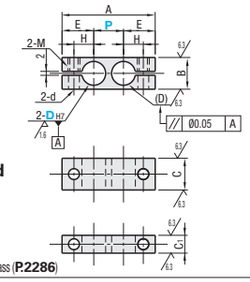

D=15~35

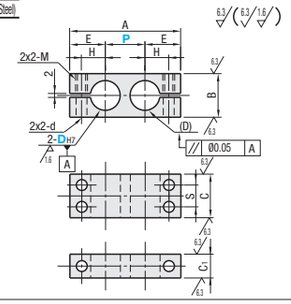

• P Dimension Tolerance: JIS B 0405 Medium Class (**P.2286**)

Part Number Type: Standard	Type: Thin	DH7		P Selection	A	B	C	C1	E	H	S	M	d
Standard KKP MKP AKP SKP	Thin KKPT	8	+0.015 0	10 15 20 25	A=P+(2xE)	12	12	-	14	8	-	M5	5.5
		10				16	16	9	15	9	-		
		12	+0.018 0	15 20 25 30					16	10	-		
		15		20 25 30 40		22	22	12	18	12	11		
		20	+0.021 0	25 30 40 50		28	28	16	22	15	14	M6	6.6
		25		30 40 50 75		32	32	19	25	18	16		
		30		50 75 100 150		40	40		29	21	20	M8	9
		35	+0.025 0			45	45	22	32	24	24		

For the available sizes, refer to the price list. The tolerance and parallelism of DH7 are the tolerances before slitting.
For mating, g6, f8 shaft tolerances are recommended. Tightening with a long wrench is recommended.

Unequal Dia., Parallel Holes, Pitch Selectable

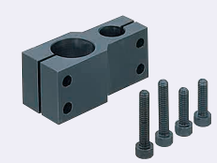

RoHS10

Type: Standard	Type: Thin	M Material	S Surface Treatment	A Accessory
KKQ	KKQT	EN 1.0038 Equiv.	Black Oxide	Hex Socket Head Cap Screw

D=10, 12

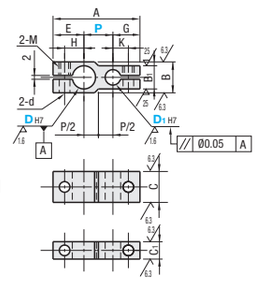

D=15~35

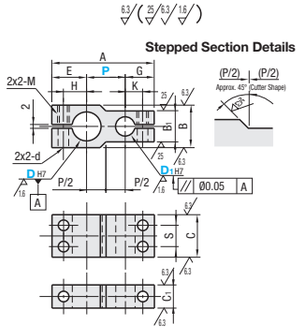

• P Dimension Tolerance: JIS B 0405 Medium Class (**P.2286**)

Part Number Type: Standard	Type: Thin	DH7		D1H7		P Selection	A	B	B1	C	C1	E	G	H	K	S	M	d
Standard KKQ	Thin KKQT	10	+0.015 0	8	+0.015 0	15 20 25	A=P+E+G	16	12	16	9	15	14	9	8	-	M5	5.5
		12	+0.018 0	10		15 20 25 30		16	14	16	9	16	15	10	9	-		
		15						22	16	22	12	18	15	12	9	11		
		20	+0.021 0	15	+0.018 0	20 25 30 40		28	22	28	16	22	19	15	12	14	M6	6.6
		25				25 30 40 50		32	22	32	19	25	19	18	12	16		
		30		20	+0.021 0	30 40 50 75		40	28	40	19	29	23	21	15	20	M8	9
		35	+0.025 0	25		50 75 100 150		45	32	45	22	32	25	24	18	24		

The tolerance and parallelism of DH7 and D1H7 are the tolerances before slitting. For the available sizes, refer to the price list.
For mating, g6, f8 shaft tolerances are recommended. Tightening with a long wrench is recommended.

Ordering Example

Part Number	-	D1	-	P
KKP10			-	20
KKQT20	-	15	-	30

D	Unit Price: Equal Dia., Parallel, Standard KKP	MKP	AKP	SKP	Thin KKPT	Unequal Dia., Parallel, Standard KKQ	Thin KKQT
8					-	-	-
10							
12							
15							
20							
25							
30							
35		-	-	-			

Included Screw

D	Included Screw (Thin Type has 1 screw on each side.) Equal Dia., Parallel	Unequal Dia., Parallel
8	M5-12, 2pcs.	-
10	M5-15, 2 pcs.	M5-12/M5-10, 1pc. each
12	M5-15, 2 pcs.	M5-15, 2 pcs.
15	M5-20, 4pcs.	M5-20/M5-15, 2pcs. each
20	M6-25, 4pcs.	M6-25/M6-20, 2pcs. each
25	M6-30, 4pcs.	M6-30/M6-20, 2pcs. each
30	M8-35, 4pcs.	M8-35/M8-30, 2pcs. each
35	M8-40, 4pcs.	M8-40/M8-35, 2pcs. each