Strut Clamps
Vertical Taps

Features: Clamp type of mounting a device perpendicular to post.

Vertical Taps

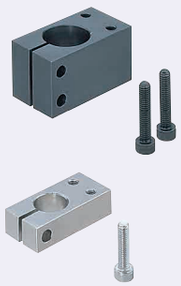

Type: Pitch Selectable Standard	Pitch Selectable Thin	Pitch Configurable Standard	Pitch Configurable Thin	M Material	S Surface Treatment	A Accessory
KMN	KMNU	KML	KMLU	EN 1.0038 Equiv.	Black Oxide	Hex Socket Head Cap Screw
MMN	MMNU	MML	MMLU		Electroless Nickel Plating	Hex Socket Head Cap Screw (Stainless Steel)
AMN	AMNU	-	-	Aluminum Alloy 6000 series	Black Anodize	Hex Socket Head Cap Screw
-	WMNU	-	-		Clear Anodize	Hex Socket Head Cap Screw (Stainless Steel)
SMN	SMNU	-	-	EN 1.4301 Equiv.	-	

CB screws are included with the black oxide and black anodized products, and SCB screws are included with the other products.

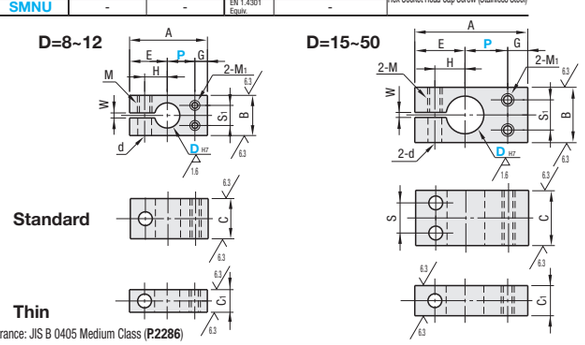

RoHS10

• P Dimension Tolerance: JIS B 0405 Medium Class (P.2286)

Pitch Selectable

Part Number Type		D H7		P	A	B	C	C1	E	G	H	S1	M1	S	W	M	d
Standard KMN MMN AMN SMN (D≤30)	Thin KMNU MMNU AMNU WMNU SMNU (D≤30)	8	+0.015 0	10	29	12	12	-	14	5	8	6	M3	-	2	M5	5.5
		10		11	31	16	16	9	15		9	8	M4	-			
		12	+0.018 0	13	34				16		10			-			
		15		17	45	22	22	12	20	8	12	12	M5	12			
		16						-									
		20	+0.021 0	20	52	28	28	16	22	10	15	16	M6	14		M6	6.6
		25		23	58	32	32	19	25		18	20		16			
		30		27	66	40	40		29		21	25	M8	20		M8	9
		35	+0.025 0	30	72	45	45	22	32		24	28					
KMN	KMNU	40	+0.025 0	35	79	50	50	25	34	10	26	30	M8	20	2	M8	9
		50		45	103	65	65	32	43	15	33	38	M10	32	3	M10	11

For the available sizes, refer to the price list. D=16 is only applicable to Standard Pitch (except Clear Anodize). D H7 tolerance is before the slit machining.
For mating, g6, f8 shaft tolerances are recommended. Tightening with a long wrench is recommended.

Pitch Configurable

Part Number Type		D H7		P Selection	A	B	C	C1	E	G	H	S1	M1	S	W	M	d
Standard KML MML	Thin KMLU MMLU	10	+0.015 0	20 30	A=P+E+G	16	16	9	15	5	9	8	M4	-	2	M5	5.5
		12	+0.018 0						16		10			-			
		15		25 30		22	22	12	20	8	12	12	M5	12			
		20	+0.021 0	30 40		28	28	16	22	10	15	16	M6	14		M6	6.6
		25				32	32	19	25		18	20		16			
		30		40 50		40	40		29		21	25	M8	20		M8	9
KML	KMLU	40	+0.025 0	40 50	A=P+E+G	50	50	25	34	10	26	30	M8	20	2	M8	9

For the available sizes, refer to the price list. D H7 tolerance is before the slit machining.
For mating, g6, f8 shaft tolerances are recommended. Tightening with a long wrench is recommended.

Ordering Example

Part Number	-	P
KMN10		
KMLU20	-	30

Unit Price

D	Pitch Selectable Standard KMN	MMN	AMN	SMN	Thin KMNU	MMNU	AMNU	WMNU	SMNU	Pitch Configurable Standard KML	MML	Thin KMLU	MMLU
8					-	-	-	-	-	-	-	-	-
10													
12													
15													
16					-	-	-	-	-	-	-	-	-
20													
25								-				-	
30													
35				-				-	-	-	-	-	-
40		-	-	-		-	-	-	-		-		-
50		-	-	-		-	-	-	-	-	-	-	-

Included Screw

D	Included Screw (Thin Type has 1 screw on each side.)
8	M5-12, 1 pc.
10	M5-15, 1 pc.
12	M5-15, 1 pc.
15	M5-20, 2 pcs.
16	M5-20, 2 pcs.
20	M6-25, 2 pcs.
25	M6-30, 2 pcs.
30	M8-35, 2 pcs.
35	M8-40, 2 pcs.
40	M8-45, 2 pcs.
50	M10-55, 2 pcs.

Strut Clamps
Parallel Taps

Features: Clamp type of mounting a device parallel to post.

Parallel Taps

Type: Pitch Selectable Standard	Pitch Selectable Thin	Pitch Configurable Standard	Pitch Configurable Thin	M Material	S Surface Treatment	A Accessory
KQM	KQMU	KQL	KQLU	EN 1.0038 Equiv.	Black Oxide	Hex Socket Head Cap Screw
MQM	MQMU	MQL	MQLU		Electroless Nickel Plating	Hex Socket Head Cap Screw (Stainless Steel)
AQM	AQMU	AQL	-	EN AW-6063 Equiv.	Black Anodize	Hex Socket Head Cap Screw
WQM	WQMU	-	-		Clear Anodize	Hex Socket Head Cap Screw (Stainless Steel)
SQM	SQMU	SQL	SQLU	EN 1.4301 Equiv.	-	

CB screws are included with the black oxide and black anodized products, and SCB screws are included with the other products.

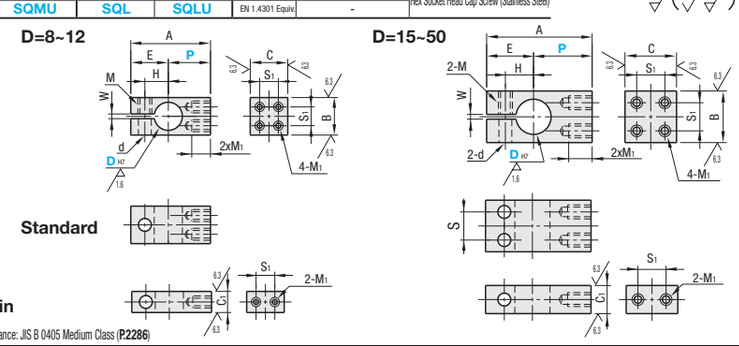

RoHS10

• P Dimension Tolerance: JIS B 0405 Medium Class (P.2286)

Pitch Selectable

Part Number Type		D H7		P	A	B	C	C1	E	H	S1	M1	S	W	M	d
Standard KQM MQM AQM WQM SQM (D≤30)	Thin KQMU MQMU AQMU WQMU SQMU (D≤30)	8	+0.015 0	15	29	12	12	-	14	8	6	M3	-	2	M5	5.5
		10		16	31	16	16	9	15	9	8	M4	-			
		12	+0.018 0	18	34				16	10			-			
		15		25	45	22	22	12	20	12	12	M5	12			
		16						-								
		20	+0.021 0	30	52	28	28	16	22	15	16	M6	14		M6	6.6
		25		33	58	32	32	19	25	18	20		16			
		30		37	66	40	40		29	21	25	M8	20		M8	9
		35	+0.025 0	40	72	45	45	22	32	24	28					
KQM	KQMU	40	+0.025 0	45	79	50	50	25	34	26	30	M8	20	2	M8	9
		50		60	103	65	65	32	43	33	38	M10	32	3	M10	11

For the available sizes, refer to the price list. D=16 is only applicable to Standard Pitch (except Clear Anodize). D H7 tolerance is before the slit machining.
For mating, g6, f8 shaft tolerances are recommended. Tightening with a long wrench is recommended.

Pitch Configurable

Part Number Type		D H7		P Selection	A	B	C	C1	E	H	S1	M1	S	W	M	d
Standard KQL MQL AQL SQL (D≤30)	Thin KQLU MQLU SQLU (D≤20)	10	+0.015 0	20 30	A=P+E	16	16	9	15	9	8	M4	-	2	M5	5.5
		12	+0.018 0	25 35					16	10			-			
		15		30 40		22	22	12	20	12	12	M5	12			
		20	+0.021 0	25 40		28	28	16	22	15	16	M6	14		M6	6.6
		25		40 50		32	32	19	25	18	20		16			
		30		50 60		40	40		29	21	25	M8	20		M8	9
		35	+0.025 0			45	45	22	32	24	28					
KQL	KQLU	40	+0.025 0	50 60	A=P+E	50	50	25	34	26	30	M8	20	2	M8	9
		50		50 70		65	65	32	43	33	38	M10	32	3	M10	11

For the available sizes, refer to the price list. D H7 tolerance is before the slit machining. For mating, g6, f8 shaft tolerances are recommended. Tightening with a long wrench is recommended.

Ordering Example

Part Number	-	P
MQM12		
KQLU25	-	40

Unit Price

D	Pitch Selectable Standard KQM	MQM	AQM	WQM	SQM	Thin KQMU	MQMU	AQMU	WQMU	SQMU	Pitch Configurable Standard KQL	MQL	AQL	SQL	Thin KQLU	MQLU	SQLU
8						-	-	-	-	-	-	-	-	-	-	-	-
10																	
12																	
15													-				
16				-		-	-	-	-	-	-	-	-	-	-	-	-
20																	
25									-					-			-
30																	-
35					-	-		-	-	-				-			-
40		-	-	-	-		-	-	-	-		-	-	-	-	-	-
50		-	-	-	-		-	-	-	-		-	-	-	-	-	-

Included Screw

D	Included Screw (Thin Type has 1 screw on each side.)
8	M5-12, 1 pc.
10	M5-15, 1 pc.
12	M5-15, 1 pc.
15	M5-20, 2 pcs.
16	M5-20, 2 pcs.
20	M6-25, 2 pcs.
25	M6-30, 2 pcs.
30	M8-35, 2 pcs.
35	M8-40, 2 pcs.
40	M8-45, 2 pcs.
50	M10-55, 2 pcs.