Strut Clamps

Vertical / Parallel Taps, Split

Features: Post-assembly mounting onto Posts for Stands in structures.

Vertical Taps, Split Parallel Taps, Split

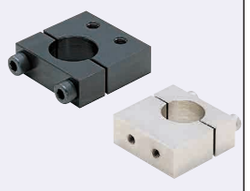

RoHS10

Type: Vertical Taps	Type: Parallel Taps	M Material	S Surface Treatment	A Accessory
KRTP	KRPP	EN 1.0038 Equiv.	Black Oxide	Hex Socket Head Cap Screw
MRTP	MRPP		Electroless Nickel Plating	Hex Socket Head Cap Screw (Stainless Steel)
ARTP	ARPP	EN AW-6063 Equiv.	Black Anodize	Hex Socket Head Cap Screw
SRTP	SRPP	EN 1.4301 Equiv.	-	Hex Socket Head Cap Screw (Stainless Steel)

Vertical Taps

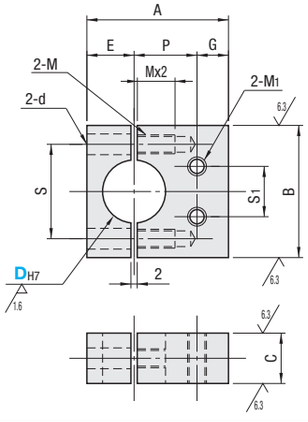

Parallel Taps

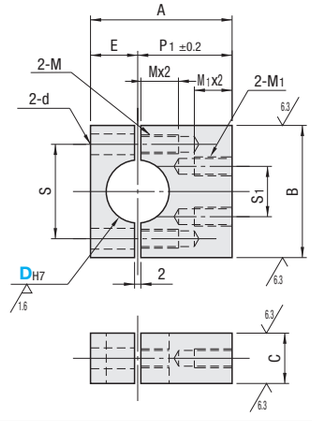

Part Number Type: Vertical Taps	Part Number Type: Parallel Taps	D	DH7	A	B	C	E	P	P1	G	S	d	M (Coarse)	S1	M1 (Coarse)
KRTP	KRPP	10	+0.015 0	24	25	9	8	11	16	5	18	4.5	M4	8	M4
MRTP	MRPP	12	+0.018 0	28	28		10	13	18		20				
ARTP	ARPP	15		37	35	12	12	17	25	8	24	5.5	M5	12	M5
SRTP	SRPP	20	+0.021 0	45	45	16	15	20	30	10	30	6.6	M6	16	M6
		25		51	50	19	18	23	33		35			20	
		30		60	60		23	27	37		44	9	M8	25	M8
		35	+0.025 0	66	65	22	26	30	40		50			28	

DH7 tolerance is before the slit machining. Bore diameter 35 is not available in ARTP type.

Ordering Example

Part Number
KRTP15
MRPP20

Example

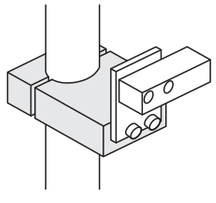

D	Unit Price KRTP KRPP	ARTP	ARPP	MRTP MRPP	SRTP SRPP
10					
12					
15					
20					
25					
30					
35		-			

Bore diameter 35 is not available in ARTP type.

Included Screw

D	Included Screw	
10	M4-15	2 pcs.
12	M4-18	
15	M5-20	
20	M6-25	
25	M6-30	
30	M8-35	
35	M8-40	

Alterations

Part Number	-	(ALW)
ARTP20	-	ALW

Alteration	Code	Spec.
Clear Anodize	ALW	Changes ARTP and ARPP from black anodize to clear anodize. Applicable to ARTP and ARPP. Stainless steel screws are included.

Strut Clamps

Anti-Rotation, Parallel Taps

Features: Z direction is adjustable while preventing the rotating direction movements such as camera mounting.

Anti-Rotation, Parallel Taps

RoHS10

Type: Set	Type: Strut Clamp only	Post: M Material	Post: S Surface Treatment	Strut Clamp: M Material	Strut Clamp: S Surface Treatment
KBYKS	KBYK	EN 1.1191 Equiv.	Electroless Nickel Plating	EN 1.0038 Equiv.	Black Oxide
KBYMS	KBYM				Electroless Nickel Plating
KBYSS	KBYS	EN 1.4301 Equiv.	-	EN 1.4301 Equiv.	-

A set includes 1 pc. of clamp and 1 pc. of post. Use the Strut Clamp on this page with the post included in the set.

Strut Clamps

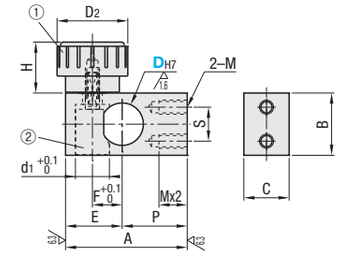

Post

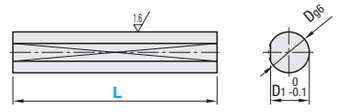

No.	Name of Parts	M Material
①	Knurled Knob Screw	ABS / Brass (Insert)
②	Clamp	EN CW614N Equiv. (No Cadmium)

Part Number Type: Set	Part Number Type: Strut Clamp only	D	L	D1	A	B	C	S	M	P	E	F	d1	H	D2
KBYKS	KBYK	10	100 (D≤20)	9	35	19	12	10	M5	20	15	7.5	10	18	25
KBYMS	KBYM	12	150 (D≤20)	11	36						16	8.5			
KBYSS	KBYS	15	200	14	45	*22(25)	16	12		25	20	10.5	12		
		20	250 (12≤D)	19	47	25			M6		22	13			32
		25	300 (12≤D)	23.5	55	32		16		30	25	15			

*When D direction of KBYS (EN 1.4301 Equiv.) is 15, B=25.

Ordering Example

Part Number	-	L
KBYMS15	-	250
KBYK20		

Set

D	Unit Price KBYKS L100	L150	L200	L250	L300	KBYMS L100	L150	L200	L250	L300	KBYSS L100	L150	L200	L250	L300
10				-	-				-	-				-	-
12															
15															
20															
25	-	-				-	-				-	-			

Strut Clamp only

D	Unit Price KBYK	KBYM	KBYS
10			
12			
15			
20			
25			

Reference Data on Retention Force

Measured values with D=15 as shown below.
For EN 1.0038 Equiv.: 580N
For EN 1.4301 Equiv.: 530N

*The above are actual measurements and not guaranteed.

<<Measuring Method for Retention Force>>

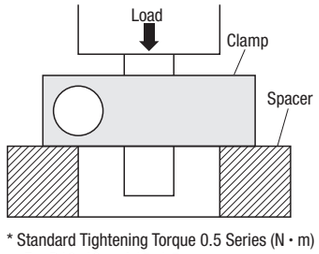

* Standard Tightening Torque 0.5 Series (N・m)
For D10, 12 and 15: 1.5
For D20 and 25: 2.6
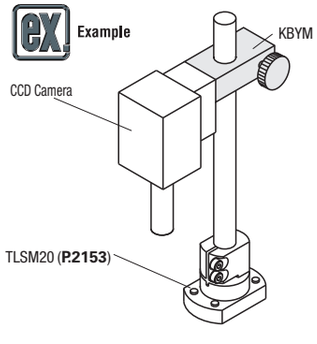
Example