Gussets

Through/Counterbored Holes, Hole Position Fixed

Features: Through holes and counterbored holes are selectable. In addition, hole on either A side or B side can be changed to tapped holes.

RoHS10

Details Listed in Dimensional Section

Type: Standard Grade (Perpendicularity: 0.05/100) Through Hole	Standard Grade Counterbored Hole	Precision Grade (Perpendicularity: 0.02/100) Through Hole	M Material	S Surface Treatment
RBDS	RBYS	RGDS	EN 1.0038 Equiv.	-
RBDB	RBYB	RGDB		Black Oxide
RBDM	RBYM	RGDM		Electroless Nickel Plating
RBDA	RBYA	RGDA	EN AW-5052 Equiv.	-
RBDW	RBYW	RGDW		Clear Anodize
RBDV	RBYV	RGDV		Black Anodize
RBDF	-	RGDF	EN 1.4301 Equiv.	-

⊗B200 or more are not available for Precision Type and Counterbored Type.

Hole and Bolt Selection Table

Hole Type	Through Hole	Counterbored Hole
Shape	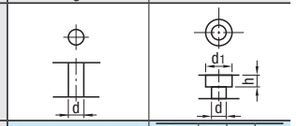	
Machining Specifications	Screw Nominal Dia. 5 / 6 / 8; d: 5.5 / 6.5 / 9	Screw Nominal Dia. 4 / 5 / 6; d: 4.5 / 5.5 / 6.5; d1: 8 / 9.5 / 11; h: 4.4 / 5.4 / 7

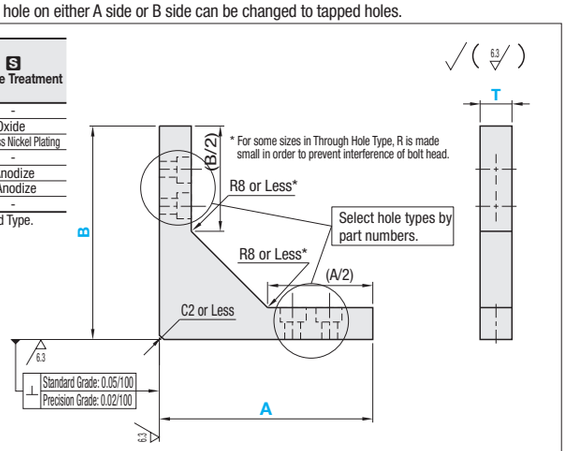

When A=30 or 50

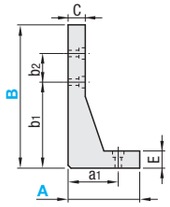

A	a1	C
30	20	8
50	35	(When B is 100 or less) 12; (When B=150) 17

B	b1	b2	E
30	20	- *	8
50	35		(When A=30) 8; (When A=50) 12
80	50	15	(When A=30) 8; (When A=50) 12
100	60	20	12
150	90	30	20

* 1 mounting hole for B50 or less.

T	Through Hole (Screw Nominal Dia.)	Counterbored Hole (Screw Nominal Dia.)
10, 12	5	4
16	8	6

*The nominal diameter is the recommended screw size. For details of dimension, see Hole and Bolt Selection Table.

When A=80, 100 or 150

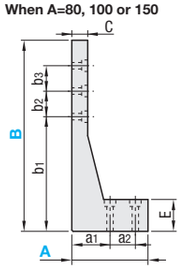

A	a1	a2	C
80	50	15	(When B is 100 or less) 20; (When B is 150 or more) 25
100	60	20	(When B is 150 or less) 25; (When B is 200 or more) 35
150	90	30	40

B	b1	b2	b3	E
80	50	15	- *	20
100	60	20	- *	(When A=80) 20; (When A=100) 25
150	90	30	- *	(When A=80) 30; (When A=100) 25; (When A=150) 40
200	140	20	20	40
250	160	30	30	40
300	180	40	40	40

* 2 mounting holes for B150 or less.

T	Through Hole (Screw Nominal Dia.)	Counterbored Hole (Screw Nominal Dia.)
12	6	5
16	8	6

*The nominal diameter is the recommended screw size. For details of dimension, see Hole and Bolt Selection Table.

Standard Grade Through Hole / Counterbored Hole (⊗B200 or more are not available for Counterbored Hole Type.)

Part Number Type		A	B Selection	T Selection (EN 1.0038 Equiv.)	T Selection (EN AW-5052 Equiv., EN 1.4301 Equiv.)
Through Hole (EN 1.0038 Equiv.) RBDS, RBDB, RBDM (EN AW-5052 Equiv.) RBDA, RBDW, RBDV (EN 1.4301 Equiv.) RBDF	Counterbored Hole (EN 1.0038 Equiv.) RBYS, RBYB, RBYM (EN AW-5052 Equiv.) RBYA, RBYW, RBYV	30	30 50 80 100	12	10
		50	50 80 100	12	10
			150	12 16	12 16
		80	80 100 150 200 250	12 16	12 16
		100	100 150 200 250 300	12 16	12 16
		150	150 200 250 300	12 16	12 16

Precision Grade - Through Hole

Part Number Type	A	B Selection	T Selection (EN 1.0038 Equiv.)	T Selection (EN AW-5052 Equiv., EN 1.4301 Equiv.)
Through Hole (EN 1.0038 Equiv.) RGDS, RGDB, RGDM (EN AW-5052 Equiv.) RGDA, RGDW, RGDV (EN 1.4301 Equiv.) RGDF	30	30 50 80 100	12	10
	50	50 80 100	12	10
		150	12 16	12 16
	80	80 100 150	12 16	12 16
	100	100 150	12 16	12 16
	150	150	12 16	12 16

Ordering Example: Part Number - B - T
RBDA100 - 150 - T12

Alterations: Part Number - B - T - (ASY, BSY)
RBYB100 - 150 - T16 - ASY5

Alteration	Code	Spec.
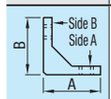	ASY BSY	Changes holes to tapped holes. Hole diameters are selectable. Ordering Code: Change of the hole on side A --- ASY4; Change of the hole on side B --- BSY5; Tapped hole may go through. (T / Screw Nominal Dia. (M): 10 / 4, 5; 12 / 4, 5, 6; 16 / 5, 6, 8)

Calculation Example of Unit Price	Calculation Example of Precision Grade
RBDA100-150-T16 A+B=A Dimension + B Dimension =100+150=250	RGDA100-150-T16

Standard Grade Tolerance Unit Price (Tolerance Precision Type: Price in the Table x1.1.

A+B	Through Hole: EN 1.0038 Equiv. RBDS T=12	RBDS T=16	RBDB T=12	RBDB T=16	RBDM T=12	RBDM T=16	EN AW-5052 Equiv. RBDA T=10,16	RBDA T=12	RBDW, RBDV T=10,16	RBDW, RBDV T=12	EN 1.4301 Equiv. RBDF T=10,16	RBDF T=12	Counterbored Hole: EN 1.0038 Equiv. RBYS T=12	RBYS T=16	RBYB T=12	RBYB T=16	RBYM T=12	RBYM T=16	EN AW-5052 Equiv. RBYA T=10,16	RBYA T=12	RBYW, RBYV T=10,16	RBYW, RBYV T=12
60																						
80		-		-		-		-		-		-		-		-		-		-		-
100																						
110																						
130		-		-		-		-		-		-		-		-		-		-		-
150																						
160																						
180																						
200																						
230																						
250																						
280													-	-	-	-	-	-	-	-	-	-
300																						
330																						
350													-	-	-	-	-	-	-	-	-	-
400																						
450																						

Gussets

Through Hole, Hole Position Configurable

Features: The mounting hole pitch can be configured. When the mounting hole pitch does not match with the fixed dimension (Through Hole) on the left-hand page, the following standard is available.

RoHS10

Type: Standard Grade (Perpendicularity: 0.05/100)	M Material	S Surface Treatment
RBPDS	EN 1.0038 Equiv.	-
RBPDB		Black Oxide
RBPDM		Electroless Nickel Plating
RBPDA	Aluminum Alloy 5000 series	-
RBPDW		Clear Anodize
RBPDF	EN 1.4301 Equiv.	-

When A=30 or 50 and B=30 or 50
Both side A and side B have one mounting hole.

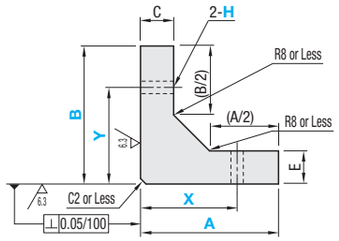

When A=30 or 50 and B=80 or 100
Side A has one mounting hole.

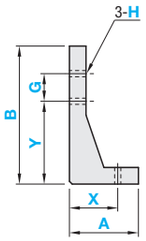

When A=80 or 100

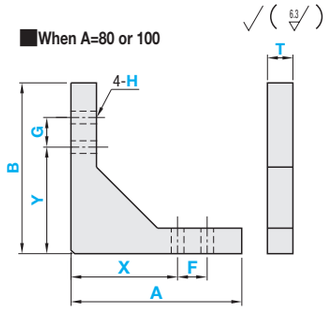

Dimension	H (Nominal Dia.) 3	4	5	6	8
Hole Dia.	3.5	4.5	5.5	6.5	9

Part Number Type	A	B	1mm Increment: Side A Hole Pitch X	Side A Hole Pitch F	Side B Hole Pitch Y	Side B Hole Pitch G	H	T: EN 1.0038 Equiv.	T: EN AW-5052 Equiv. EN 1.4301 Equiv.	C	E
(EN 1.0038 Equiv.) RBPDS RBPDB RBPDM (Aluminum Alloy 5000 series) RBPDA RBPDW (EN 1.4301 Equiv.) RBPDF	30	30 50	20~24	- *1	Y≥(B/2)+6	- *2	3 4 5	12	10	8	8
		80				G≥Hx2 and Y+G≤B-6 or 0*3					
	50	50	30~44			- *2				12	12
		80 100				G≥Hx2 and Y+G≤B-6 or 0*3					
	80	80 100	50~56	F≥Hx2 and X+F≤A-8 or 0*3	Y≥(B/2)+8	G≥Hx2 and Y+G≤B-8 or 0*3	5 6 8	12	12	20	20
	100	100 150	60~76							25	25

*1 When A=30 or 50, side A has 1 mounting hole and specification of F dimension is not required.
*2 When B=30 or 50, side B has 1 mounting hole and specification of G dimension is not required.
*3 When 0 is specified for F and G dimensions, 1 mounting hole is available.

Ordering Example: Part Number - B - X - F - Y - G - H - T
RBPDS50 - 100 - X40 - Y70 - G20 - H4 - T12
RBPDA100 - 150 - X70 - F0 - Y90 - G15 - H6 - T12

A+B	Unit Price: EN 1.0038 Equiv. RBPDS	RBPDB	RBPDM	EN AW-5052 Equiv. RBPDA	RBPDW	EN 1.4301 Equiv. RBPDF
60						
80						
100						
110						
130						
150						
160						
180						
200						
250						