Shock Absorbers
Economy

RoHS10

EMACN

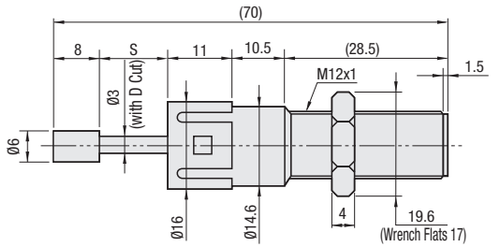

Operating Temp. Range : -10 ~ 50°C
Durability : 500,000 times
Collision Velocity Range : No.1212A, B, C :0.3~1.0 m/s
No.1212D :0.1~0.7 m/s
No.1212E :0.1~0.5 m/s
Max. Tightening Torque: 1.5N・m
(When shouldering to Ø14.6, tighten up at 1.0N/m.)

Parts	M Material	S Surface Treatment
Main Body	PPS	-
Cap	POM	
Piston Rod	EN CW614N Equiv.	Electroless Nickel Plating

A Accessory: Nut <Opposite Angle 19.6, Opposite Side17>

Part Number Type	Part Number No.	Cap Color	Thread Dia. M	Stroke S	Max. Absorbed Energy (E') per Impact (J)	Max. Absorbed Energy (E') per Minute (J)	Max. Equiv. Mass (me') (kg)	Piston Rod Return Force (N)	Max. Drag Value (N)	Unit Price 1 ~ 4 pc(s).	Volume Discount Rate 5 ~ 10 pcs.
EMACN	1212A	White	M12x1	12	0.29	14.7	1.5	2.45	245		
	1212B	Black			0.49		3.0		294		
	1212C	Yellow			1.0	5.0	5.0				
	1212D	Green					7.5				
	1212E	Red					10.0				

Ordering Example

Part Number
EMACN1212A

Shock Absorbers
Adjustable

RoHS10

MAC (Cap) MAS (No Cap)

(No.0806*, 1008*, 1210*, 1214, 1410, 1417, 1612*, 1620*, 2016*, 2530*, 2725*, 3035*, 3650*)
Shapes of adjustable parts of * marked products are as shown in figures below.

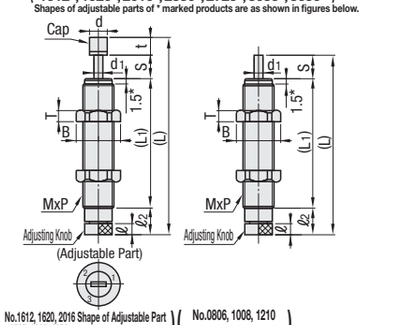

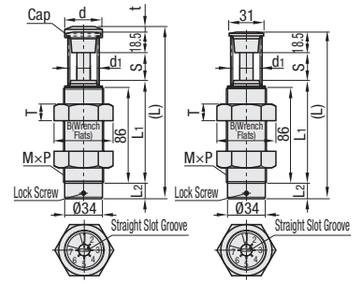

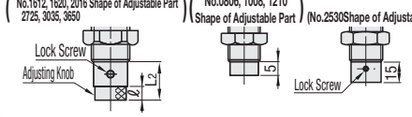

Avoid parallel use of Adjustable Type as synchronization of shock absorption characteristics is difficult.
Impact force can be easily adjusted by turning the adjusting knob on the bottom.
Operating Ambient Temperature: -5 ~ 70°C
1.5* is the dimension of thread dia. M14 or smaller (except M8). M8 is 2.3, and M16 or larger is fully threaded.
Replace after 1,000,000 cycles.

No.	M Material (Main Body)	S Surface Treatment
0806	EN 1.4305 Equiv.	-
1008, 1210, 1214, 1410 1417, 1612, 1620, 3625	Free Cutting Steel	Electroless Nickel Plating
2016, 2530, 2725 3035, 3650	EN 1.0038 Equiv.	
Cap	Polyacetal 3035, 3625 and 3650 is urethane rubber.	-

Part Number Type	No.	Velocity	Thread Dia. MxP	Stroke S	Max. Absorbed Energy (E') per Impact (J)	Max. Absorbed Energy (E') per Minute (J)	Max. Equiv. Mass (me')(kg)	Piston Rod Return Force (N)	Max. Drag Value (N)	(L)	(L1)	L2	ℓ	d	d1	t	B (Wrench Flats)	T	MAC Unit Price 1 ~ 4 pc(s).	MAC Volume Discount Rate 5 pcs.	MAS Unit Price 1 ~ 4 pc(s).	MAS Volume Discount Rate 5 pcs.
MAC (Cap) / MAS (No Cap)	0806	M	M8 x 0.75	6	1.4	36.7	15	9 or Less	670	58 (53)	41	6	3	6	2.5	5	12.7 (11)	2				
	1008	S	M10 x 1.0	8	1.02	58.8	90	5.88 or Less	637	65.2 (58.9)	42.2	8.7	3.5	6	2.4	6.3	14.2 (13)	3				
		L			1.47		10															
		M			1.76		2.5															
	1210	S	M12 x 1.0	10	2.94	98	100	9.8 or Less	1470	84 (76)	61	5	-	8	3.5	8	16.2 (14)	4				
		L					30															
		M			4.9		4															
		H																				
	1214	H		14	5.4		30	12.7 or Less	1156	92 (84)	59.5	10.5	5									
	1410	S	M14 x 1.5	10	3.62	147	120	9.8 or Less	1813	88 (80)	59	11	6	10			19.6 (17)	6				
		L			3.92		30															
		M			5.88		35															
		H					4.5															
	1417	H		17	14.7	176	50	15.7 or Less	2646	115 (105)	77.8	10.2	5		4	10						
	1612	S	M16 x 1.5	12	6.3	235	270	14.7 or Less	2646	117 (102)	75.5	14.5	4.5	13.5	5	15	20 (19)	6				
		L			9.8		50															
		M					10															
		H																				
	1620	H		20	17.6		60	19.6 or Less		143 (128)	93.5											
	2016	S	M20 x 1.5	16	20	343	600	18.1 or Less	3528	127 (110)	76	18	4	18	6	17	27.7 (24)	8				
		L			29.4		300															
		M					200															
		H					120															
	2530	S	M25 x 1.5	30	23	490	1100	33.2 or Less	3920	173 (155)	110	15	-	22	8	18	37 (32)	10				
		L			49		400															
		M					300															
		H					150															
	2725	S	M27 x 1.5	25	32	539	1500	27.3 or Less	6370	156 (136)	91	20	5	23		20						
		L			79.3		650															
		M					450															
		H					300															
	3035	S	M30 x 1.5	35	100	1176	2000	44.1 or Less	16660	206.5 (188)	128	25		27	10	18.5	41.6 (36)	14				
		M			196		1300															
		H					700															
	3625	S	M36 x 1.5	25	125	1500	3500	100 or Less	25000	155 (150)	92.5	14	-	34	12	5	53.1 (46)	10				
		L			200		2000															
		H					700															
	3650	S		50	235	2352	6700	68.6 or Less	23520	254.5 (235)	160	25	5	33	12	19.5		15				
		M			392		2700															
		H					1400															

L Dimension values in ( ) are for MAS.

kgf・m=Jx0.101972 kgf=Nx0.101972

Collision Velocity Type	Collision Velocity Range	Max. Operating Cycle
Ultra Low Speed S	0.08~0.5m/s	60cycle/min*
Low Speed L	0.3 ~1 m/s	
Medium Speed M	0.3 ~2 m/s	
High Speed H	0.7 ~3 m/s	

Ordering Example

Part Number
MAC1008H

* No.0806 is 45cycle/min; No.3035, 3625 and 3650 are 30cycle/min.