Holders for Aluminum Extrusions, Clamps

Circular Posts, Square Posts, Clamps/Stands for Factory Frames

Circular Posts

RoHS

LCSA
(Post Perpendicular Holder)

LCSBN
(Post Parallel Holder)

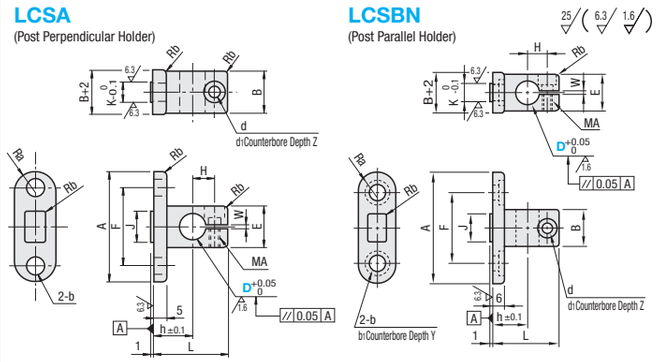

LCSB has been changed to LCSBN. The mounting holes are now counterbored.

M Material: EN AW-2017 Equiv.
S Surface Treatment: Anodize

Example

Insert the protrusion on the base into the slot of the aluminum extrusion.

Part Number Type	No.	D	Extrusion Series	A	B	h	L	H	F	b	J	K	E	d	d1	Z	MA	W	Ra	Rb	Included Screw	Unit Price 1~8 pc(s).	Volume Discount Rate 9~50
LCSA	5	6	HFS5	33	10	10	20.5	6.5	22	5.5	10	5.8	10	3.5	6.5	3.5	M3	1	5	1	SCB3-6		
		8		36	12	12	23	7	25		12		12						6		SCB3-8		
		10		39	16	15	28.5	8.5	28				16	4.5	8	4.5	M4	1.5	8		SCB4-10		
	6	8	HFS6	38	12	12	23	7	25	6.6	8	7.8	12	3.5	6.5	3.5	M3	1	6		SCB3-8		
		10		42	16	15	28.5	8.5	30		12		16	4.5	8	4.5	M4	1.5	8		SCB4-10		
		12		44	18		29	9	32				18						9		SCB4-12		

Part Number Type	No.	D	Extrusion Series	A	B	h	L	H	F	b	b1	Y	J	K	E	d	d1	Z	MA	W	Ra	Rb	Included Screw	Unit Price 1~8 pc(s).	Volume Discount Rate 9~50
LCSBN	5	6	HFS5	35	10	10	20.5	6.5	22	5.5	9	3.5	10	5.8	10	3.5	6.5	3.5	M3	1	6	1	SCB3-6		
		8		37	12	12	23	7	24				12		12						7		SCB3-8		
		10		41	16	15	28.5	8.5	28						16	4.5	8	4.5	M4	1.5	9		SCB4-10		
	6	8	HFS6	41	12	12	23	7	26	6.6	11	4	8	7.8	12	3.5	6.5	3.5	M3	1	7		SCB3-8		
		10		45	16	15	28.5	8.5	30				12		16	4.5	8	4.5	M4	1.5	9		SCB4-10		
		12		47	18		29	9	32						18						10		SCB4-12		

Ordering Example: Part Number - D
LCSA6 - 10

Square Posts

RoHS

LCAH
(20mm Square Perpendicular Mounting Holder)

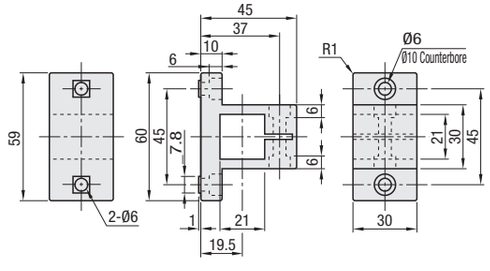

LCAC
(20mm Square Mounting Clamp)

LCAC has evacuations for molding.

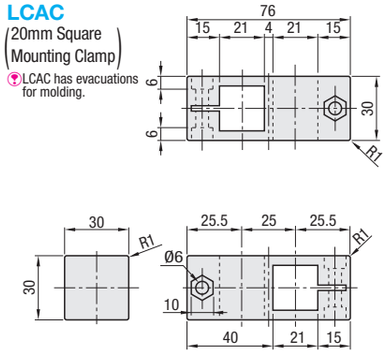

Component	M Material	S Surface Treatment
Caster	Polyamide (Black)	-
Screw	Structural Alloy Steel	Trivalent Chromate
Nut	EN 1.0038 Equiv.	Trivalent Chromate

Part Number Type	No.	D (Nominal)	Applicable Extrusion Mounting Side	Applicable Extrusion Post Side	Applicable Screw and T Nut for the Mounting Side: Screw	Quantity	T Nut	Quantity	Included Screw and T Nut for the Post Side: Screw	Quantity	Nut	Quantity	Unit Price 1~8 pc(s).	Volume Discount Rate 9~50
LCAH	6	20	HFS6	HFS5 -2020	CBM6-12	2	HNTT6-6	2	M6x23	1	M6 (JIS Class 1)	1		
LCAC			-		-	-	-	-	M6x23	2	M6 (JIS Class 1)	2		

Screws and nuts for the mounting side are not included.

Ordering Example: Part Number - D
LCAH6 - 20

Clamps/Stands for Factory Frames

RoHS

FFS105

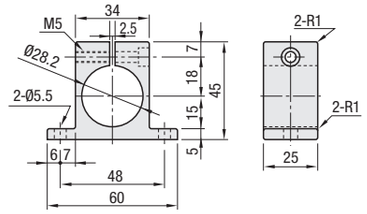

FFS205

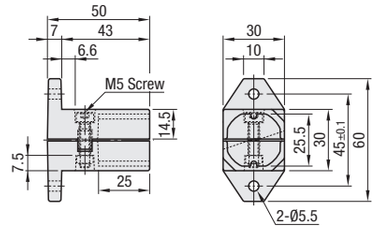

Part Number	Component	M Material	S Surface Treatment
FFS105	Caster	EN AW-6063 Equiv.	Clear Anodize
	Screw	EN 1.7220 Equiv.	Trivalent Chromate
FFS205	Caster	EN AC-46100 Equiv.	-
	Screw	EN 1.7220 Equiv.	Trivalent Chromate
	Nut	EN 1.0038 Equiv.	Trivalent Chromate

Part Number Type	Applicable Extrusion Post Side	Included Screw, Nut: Screw	Quantity	Nut	Quantity	Unit Price 1 ~ 19 pc(s).	Volume Discount Rate 20~50
FFS105	FFA28 FFAS28 (P.880) FFAU28	M5-22	1	-	-		
FFS205		M5-20	1	M5 (JIS Class 1)	1		

Ordering Example: Part Number
FFS105

Applicable Screw and Nut (Mounting Side)

Screws and nuts for the mounting side are not included.

No.	Extrusion on the Mounting Side	Screw, Nut: Screw	Quantity	Nut	Quantity
FFS105	HFS5	CBM5-10	2	HNTT5-5	2
	HFS6	CBM5-12		HNTT6-5	
	HFS8	CBM5-15		HNTT8-5	
	HFS8-45				
FFS205	HFS5	CBM5-12		HNTT5-5	
	HFS6	CBM5-15		HNTT6-5	
	HFS8	CBM5-18		HNTT8-5	
	HFS8-45				

Example

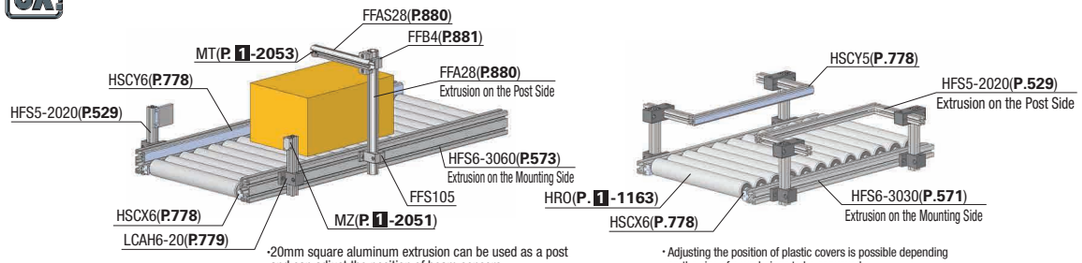

・20mm square aluminum extrusion can be used as a post and can adjust the position of beam sensors.
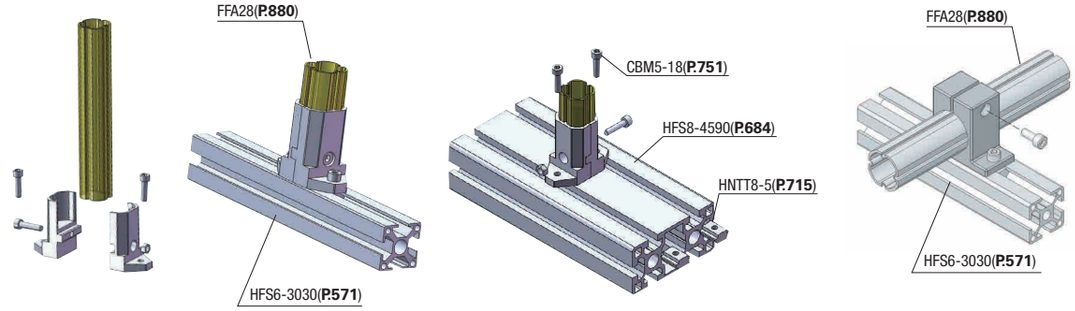
・Adjusting the position of plastic covers is possible depending on the size of a workpiece to be conveyed.