Floor Stoppers for Aluminum Extrusions

Can be used as a securing protector for Aluminum Extrusion Units.

RoHS10

AFLOCK

No.65A, 75A

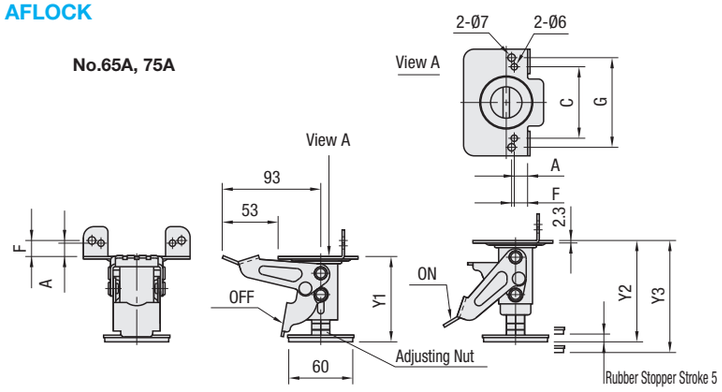

No.65B, 75B

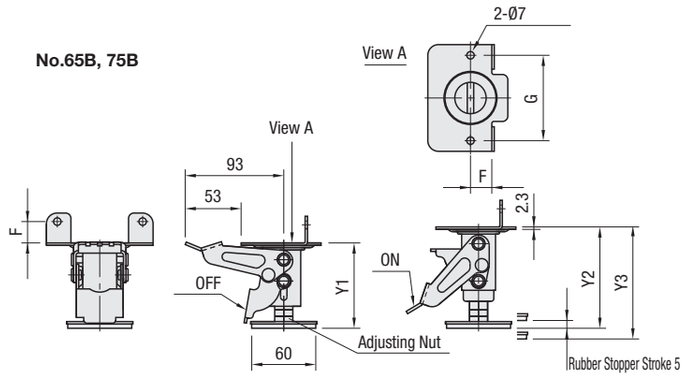

The pad section moves by turning the adjusting nut, and the distance from the floor can be adjusted.

M Material: Main Body: EN 1.0320 Equiv. (hot coiled), Built-in Spring: JIS-SWP-A
S Surface Treatment: Trivalent Chromate

Part Number Type	No.	Extrusion	Mounting Height min	Mounting Height max	Stroke Unlocked Y1(min)	Stroke Unlocked Y1(max)	Stroke Locked (Adjustment Range) Y2(min)	Stroke Locked (Adjustment Range) Y3(max)	Mounting Plate Dimension A	C	F	G	Pressure N	Mass (kg)	Unit Price
AFLOCK	65A	25, 30 Square (Single-row Slot)	85	90	75	80	90	95	12.5	67	15	84	200	0.7	
	65B	40 Square (Single-row Slot)							-	-	20	80		0.8	
	75A	25, 30 Square (Single-row Slot)	90	101	80	91	95	106	12.5	67	15	84		1.2	
	75B	40 Square (Single-row Slot)							-	-	20	80		1.3	

Ordering Example: Part Number — AFLOCK65A

Example

Cautions for Use

This product is not designed to directly support the intended objects. For tolerable loads, refer to the allowable loads of the Casters or Leveling Mounts used with this product.

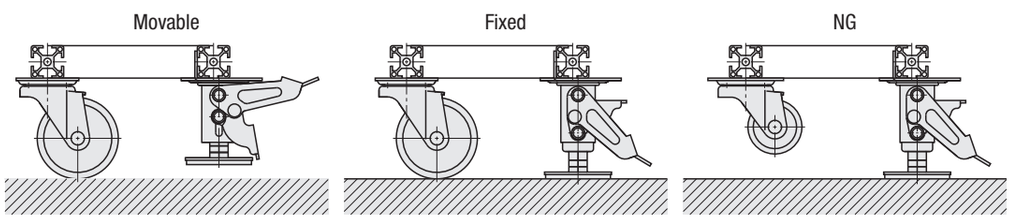

Leveling Mounts for Aluminum Extrusions

Standard Type

RoHS10

NFJN
NFJNS (Stainless Steel)
NFJNF

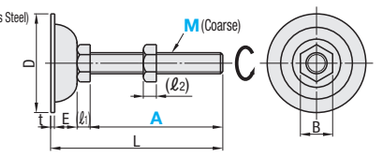

Screw shafts can turn independently of the base, and tilt by 3 to 5 degrees.

M	D	(ℓ1)	(ℓ2)	E	B	t
5	30	3.5	4	5.4	8	1.6
6		4	5		10	
8	38	5.5	6.5	11	13	
10		7	8		17	
12	60	8	10	18	19	2.0
16	75	10	13	20	24	
20		13	16		30	

Type	M Material	S Surface Treatment
NFJN	EN 1.0038 Equiv.	Trivalent Chromate
NFJNF		
NFJNS	EN 1.4301 Equiv.	Electrolytic Polishing

A Dim. Selectable

Part Number Type	M-A	L	Allowable Vertical Load (kN) NFJN, NFJNS	Mass (g)	Unit Price NFJN	Unit Price NFJNS
NFJN / NFJNS (Stainless Steel)	5-30	40.5	1.5	15		
	5-60	70.5		19		
	6-40	51	2.1	21		
	6-80	91		28		
	8-50	68.1	3.9	50		
	8-100	118.1		65		
	10-75	94.6	4.3	88		
	10-100	119.6		100		
	12-75	103	4.9	166		
	12-100	128		184		
	12-125	153		200		
	12-150	178		219		
	16-75	107	5.9	287		
	16-100	132		317		
	16-130	162		356		
	16-150	182		383		
	16-180	212		422		
	20-100	135	8.8	493		
	20-130	165		557		
	20-150	185		605		
	20-180	215		671		

A Dim. Configurable

Part Number Type	M	A 10mm Increment	L	Unit Price
NFJNF	10	80~200	A+19.6	
	12	80~250	A+28	
	16	80~300	A+32	
	20	110~300	A+35	

Tips of screws are painted.

Ordering Example: Part Number — NFJN12-100, NFJNF10 - 80

Heavy Load Type

RoHS10

FJFN
FJFNS
FJFNF

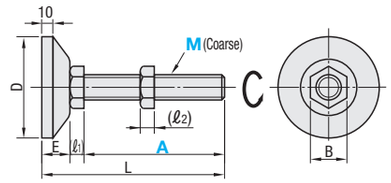

Screw shafts can turn independently of the base, and tilt by 3 to 5 degrees.

M	D	(ℓ1)	(ℓ2)	E	B
10	60	7	8	18	17
12		8	10		19
16		10	13		24
20		13	16		30

Type	M Material	S Surface Treatment
FJFN	EN 1.0038 Equiv.	Trivalent Chromate
FJFNF		
FJFNS	EN 1.4301 Equiv.	-

A Dim. Selectable

Part Number Type	M-A	L	Allowable Vertical Load (kN)	Mass (g)	Unit Price FJFN	Unit Price FJFNS
FJFN / FJFNS (Stainless Steel)	10-75	100	10	319		
	10-100	125		330		
	12-75	101	13	339		
	12-100	126		357		
	12-125	151		376		
	12-150	176		393		
	16-75	103	16.6	436		
	16-100	128		446		
	16-130	158		505		
	16-150	178		532		
	16-180	208		571		
	20-100	131	39.2	626		
	20-130	161		692		
	20-150	181		729		
	20-180	211		800		

Kgf (Load) = Nx0.101972

A Dim. Configurable

Part Number Type	M	A 10mm Increment	L	Unit Price
FJFNF	10	80~200	A+25	
	12	80~250	A+26	
	16	80~300	A+28	
	20	110~300	A+31	

Tips of screws are painted.

Ordering Example: Part Number — FJFN10-75, FJFNF20 - 150

Space Saving Type

HNFJN **HNFJR**

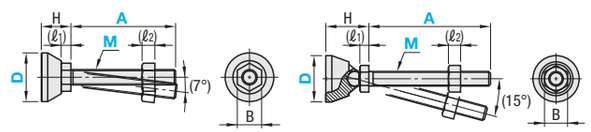

M Material: EN 1.0038 Equiv.
S Surface Treatment: Trivalent Chromate

Rotary Type

Part Number Type	D	M (Coarse)	A	Extrusion *	H HNFJN	H HNFJR	ℓ1	ℓ2	B	Allowable Vertical Load (kN)	Mass (g) HNFJN	Mass (g) HNFJR	Unit Price HNFJN	Unit Price HNFJR
HNFJN / HNFJR (Rotary Type)	28	8	20 50 100	30 Square	17.7	28.2	5.2	6.5	13	6.5	48	50		
	38	12	30 80 100	40 Square	23	35.4	7.4	10	19	13	55	59		
	48	8	20 50 100	50 Square	20.7	33.2	5.2	6.5	13	6.5	77	73		
		12	30 80 100		23	35.4	7.4	10	19	13	90	85		
	58	8	20 50 100	60 Square	20.7	33.2	5.2	6.5	13	6.5	121	115		
		12	30 80 100		23	35.4	7.4	10	19	13	133	129		

* Can be used for the end of extrusions with 1 tapped hole alterations for mounting. Cannot be mounted to extrusions with multiple tapped holes on ends.

Ordering Example: Part Number - M - A — HNFJN28 - 8 - 50

Example

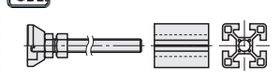

Mount directly to each single slot type to prevent the mounts from protruding the outer envelope.