Links
Bearing Embedded

Features: Bearing integrated links to support rotations.

Type		Material		Surface Treatment	Accessory	
Single Bearing	Double Bearing	Links	Bearing		Retaining Ring	Set Screw
LNBB	LNBWB	EN 1.1191 Equiv.	Steel	Black Oxide	Spring Steel	EN 1.4301 Equiv.
LNBM	LNBWM			Electroless Nickel Plating	EN 1.4301 Equiv.	
-	LNBWS	EN 1.4301 Equiv.	Stainless Steel	-		

* Double Bearing Type has no set screw.

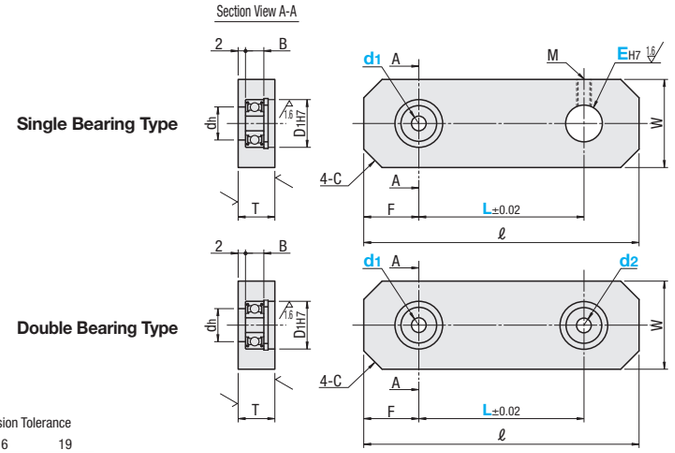

• T Dimension Tolerance

T	10~16	19
	-0.3~0	-0.33~0

Bearing Accuracy: JIS B 1514 Class 0 For details, see P.1-2239

Single Bearing Type

Part Number Type	d1	EH7 Selection	L 1mm Increment	W	T	ℓ	F	C	Tightening Screw M	Bearing No.	D1H7	Tolerance	dh	B
LNBB LNBM	5	3 4 5 6 8	20~150	20	10	L+22	10	5	When EH7 is 3 ~ 6, M3 8 ~ 16, M4 18 ~ 25, M6	605ZZ	14	+0.018 0	10	5
	6	3 4 5 6 8 10	25~150		12	L+25	12			606ZZ	17		13	6
	8	3 4 5 6 8 10 12 13 14 15 16	30~150	29		L+32	14			608ZZ	22	+0.021 0	18	7
	10			34	16	L+36	17	8		6000ZZ	26		22	8
	12	3 4 5 6 8 10 12 13 14 15 16 18	35~200	36		L+40	18			6001ZZ	28		24	8
	15	3 4 5 6 8 10 12 13 14 15 16 18 20	40~200	40		L+44	20			6002ZZ	32	+0.025 0	28	9
	20	3 4 5 6 8 10 12 13 14 15 16 18 20 25	45~300	50	19	L+56	26	10		6004ZZ	42		36	12
	25		55~300	56		L+63	29			6005ZZ	47		41	12

Double Bearing Type

Part Number Type	d1	d2 Selection	L 1mm Increment	W	T	ℓ	F	C
LNBWB LNBWM LNBWS	5	5	20~150	20	10	L+20	10	5
	6	5 6	25~150		12	L+24	12	
	8	5 6 8	30~150	29		L+28	14	
	10	5 6 8 10	30~150	34	16	L+34	17	8
	12	5 6 8 10 12	35~200	36		L+36	18	
	15	5 6 8 10 12 15	40~200	40		L+40	20	
	20	5 6 8 10 12 15 20	45~300	50	19	L+52	26	10
	25	5 6 8 10 12 15 20 25	55~300	56		L+58	29	

d1/d2 Dimensions

d1 d2	D1H7	dh	B	Bearing No.
5	14	10	5	605ZZ
6	17	13	6	606ZZ
8	22	18	7	608ZZ
10	26	22	8	6000ZZ
12	28	24	8	6001ZZ
15	32	28	9	6002ZZ
20	42	36	12	6004ZZ
25	47	41	12	6005ZZ

Ordering Example: Part Number - E - d2 - L
LNBB12 - 16 - 150
LNBWS10 - 5 - 150

Example

• Fixes the shaft by the set screw side, and supports rotations by the bearing side.

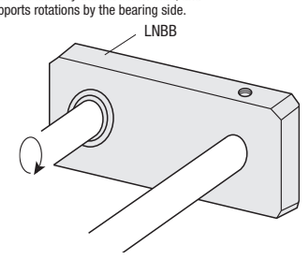

d1	Unit Price									
	LNBB		LNBM		LNBWB		LNBWM		LNBWS	
	Min. L ~ 100	L101 ~ Max. L	Min. L ~ 100	L101 ~ Max. L	Min. L ~ 100	L101 ~ Max. L	Min. L ~ 100	L101 ~ Max. L	Min. L ~ 100	L101 ~ Max. L
5										
6										
8										
10										
12										
15										
20										
25										

Links
Oil Free Bushings Press Fit

Features: Links with embedded oil free bushings to prevent abrasions by rotating.

Type		Material		Surface Treatment	Accessory
Single Bushing	Double Bushing	Links	Bushing		
-	LNMWB	EN 1.1191 Equiv.	Oil Free Bushing	Black Oxide	Hex Socket Set Screw (EN 1.4301 Equiv.)
-	LNMWM			Electroless Nickel Plating	
LNMS	LNMWS	EN 1.4301 Equiv.		-	

* Double Bearing Type has no set screw.

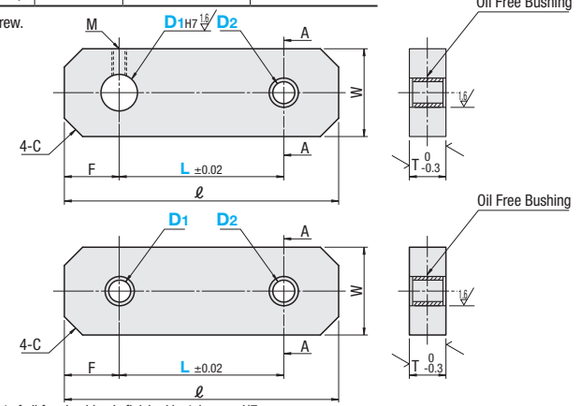

* The housing diameter of press fit part of oil free bushing is finished by tolerance H7.

Part Number Type	D1	D2 Selection	L 1mm Increment	T	W	ℓ	F	C	Tightening Screw M
Single Bushing Type LNMS	3	3 4	10~150	5	13	L+10	5	3	M3
	4	3 4	10~150						
	5	3 4 5	10~150		16	L+12	6		
	6	3 4 5 6	10~150			L+14			
	8	4 5 6 8	10~150	6	22	L+17	8		M4
	10	5 6 8	15~200			L+19	9	5	
	12	6 8	15~200		25	L+21	10		
	13	6 8 10 12 13	20~200			L+22			
	14	8 10 12 13 15	20~200	9	30	L+25	12		
	15	8 10 12 13 15	20~200		32				
	16	8 10 12 13 15	20~200					8	
	18	10 12 13 15 16 18	35~200	12	38	L+28	14		M6
	20	10 12 13 15 16 18 20	35~300			L+32	15		
	25	12 13 15 16 18 20 25	35~300		50	L+38	18		
Double Bushing Type LNMWB LNMWM LNMWS	3	3	10~150	5	13	L+10	5	3	-
	4	3 4	10~150						
	5	3 4 5	10~150		16	L+12	6		
	6	3 4 5 6	10~150						
	8	4 5 6 8	15~150	6	22	L+16	8		
	10	5 6 8 10	15~150	9		L+18	9		
	12	6 8 10 12	20~200		25	L+20	10	5	
	13	6 8 10 12 13	20~200						
	15	8 10 12 13 15	20~200	12	32	L+24	12		
	16	8 10 12 13 15 16	20~200						
	18	10 12 13 15 16 18	35~200		38	L+28	14	8	
	20	10 12 13 15 16 18 20	35~300			L+30	15		
	25	12 13 15 16 18 20 25	35~300		50	L+36	18		

Ordering Example: Part Number - D2 - L
LNMS10 - 6 - 70

D1	Unit Price							
	LNMS		LNMWB		LNMWM		LNMWS	
	Min. L ~ 100	L101 ~ Max. L	Min. L ~ 100	L101 ~ Max. L	Min. L ~ 100	L101 ~ Max. L	Min. L ~ 100	L101 ~ Max. L
3								
4								
5								
6								
8								
10								
12								
13								
14			-	-	-	-	-	-
15								
16								
18								
20								
25								

Oil Free Bushing

Single Bushing Type D1	D2	Oil Free Bushing d (I.D.)	L (Overall Length)
3, 4, 5, 6	3	3	4
	4	4	4
	5	5	4
	6	6	4
8, 10, 12	4	4	5
	5	5	5
	6	6	5
	8	8	5
13, 14, 15, 16	6	6	8
	8	8	8
	10	10	8
	12	12	8
	13	13	8
	15	15	8
18, 20, 25	10	10	10
	12	12	10
	13	13	10
	15	15	10
	16	16	10
	18	18	10
	20	20	10
	25	25	10

Double Bushing Type D1	D2	Oil Free Bushing (2 pcs.) d (I.D.)	L (Overall Length)
3, 4, 5 6	3	3	4
	4	4	4
	5	5	4
	6	6	4
8	4	4	5
	5	5	5
	6	6	5
	8	8	5
10, 12, 13, 15	5	5	8
	6	6	8
	8	8	8
	10	10	8
	12	12	8
	13	13	8
	15	15	10
16, 18 20, 25	8	8	10
	10	10	10
	12	12	10
	13	13	10
	15	15	10
	16	16	10
	18	18	10
	20	20	10
	25	25	10