Flanged Linear Bushings Standard

-Double Type / Opposite Counterbored Hole-

Price Reduction

CAD Data

Flange Type Height-adjusting Spacers can be select from P.288

Standard Type

RoHS10

Counterbored Holes	Type: Round Flange	Type: Square Flange	Type: Compact Flange	Outer Cylinder: M Material	Outer Cylinder: H Hardness	Outer Cylinder: S Surface Treatment	Steel balls: M Material	Retainer: M Material	Ambient Operating Temp.	A Accessory
Opposite Counterbored Hole	LHZRW	LHZSW	LHZCW	1.3505/100Cr6	58HRC~	-	1.3505/100Cr6	Plastic (Duracon M90 equivalent)	-20~80°C	Seals M Material Nitrile Rubber (-20 ~120°C)
Standard Type	LHFRW-N No Seal	LHFSW-N No Seal	LHFCW-N No Seal							
	LHFRW	LHFSW	LHFCW							
	LHFRWF	LHFSWF	LHFCWF					1.4125/X105CrMo17	-20~110°C	
	LHFRWR	LHFSWR	LHFCWR			LTBC	1.4125/X105CrMo17 equivalent	Plastic (Duracon M90 equivalent)	-20~80°C	
	LHFRWM	LHFSWM	LHFCWM			Electroless Nickel Plating				
	LHFRWMF	LHFSWMF	LHFCWMF					1.4125/X105CrMo17	-20~110°C	
	SLHFRW	SLHFSW	SLHFCW	1.4125/X105CrMo17 equivalent	56HRC~	-		Plastic (Duracon M90 equivalent)	-20~80°C	
	SLHFRWS	SLHFSWS	SLHFCWS					1.4125/X105CrMo17	-20~120°C	

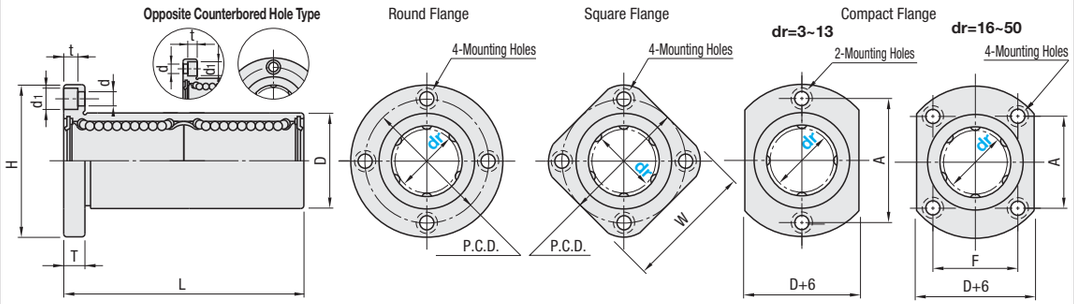

Features of LTBC see P.278 No seal for dr=3 and 4, LHFRW-N, LHFSW-N and LHFCW-N. For ball row details, see P.279

dr	Tolerance	D	D Tolerance: Surface Treatment No	D Tolerance: Surface Treatment Yes	L	L Tolerance	H	T	d	d_1	t	P.C.D.	W	F	A	Eccentricity	Perpendicularity	Basic Load Rating C (Dynamic) N	Basic Load Rating Co (Static) N	Allowable Static Moment Mo Nm	Mass(g) Round Flange	Mass(g) Square Flange	Mass(g) Compact Flange
3	0 -0.010	7	0 -0.011	0 -0.015	19	±0.3	19	3.5	2.5	4.5	2.1	13	15	-	13	0.010	0.010	138	210	0.51	8.7	7	7.7
4		8			23		20					14	16	-	14			176	254	0.63	11	9	10
5		10			28		25					17	20	-	17			263	412	1.38	24	20	21
6		12	0 -0.013	0 -0.018	35		28	5	3.5	6	3.1	20	22	-	20	0.015	0.015	324	529	2.18	31	25	28
8		15			45		32					24	25	-	24			431	784	4.31	51	43	47
10		19	0 -0.016	0 -0.021	55		40	6	4.5	7.5	4.1	29	30	-	29			588	1100	7.24	98	78	90
12		21			57		42					32	32	-	32			657	1200	10.9	110	90	102
13		23			61		43					33	34	-	33			813	1570	11.6	130	108	123
16		28			70		48					38	37	22	31			1230	2350	19.7	190	165	182
20	0 -0.012	32	0 -0.019	0 -0.025	80		54	8	5.5	9	5.1	43	42	24	36	0.020	0.020	1400	2740	26.8	260	225	247
25		40			112		62					51	50	32	40			1560	3140	43.4	540	500	525
30		45			123		74	10	6.6	11	6.1	60	58	35	49			2490	5490	82.8	680	590	645
35	0 -0.015	52	0 -0.022	0 -0.030	135		82					67	64	38	55	0.025	0.025	2650	6270	110	1020	930	945
40		60			151		96	13	9	14	8.1	78	75	45	64			3430	8040	147	1570	1380	1423
50		80			192		116					98	92	56	80			6080	15900	397	3600	3400	3437

For linear bushings, hardened shafts with g6 tolerance are recommended. P.107~195

kgf=Nx0.101972

Price

Quantity Discount Price (Round down to one Cent.) P.87

-LHFRW / LHFCW

Quantity	1~19	20~34	35~49	50~99
Rate	€ Unit Price	5%	10%	18%
Days to Ship	Standard			

For orders larger than indicated quantity,

-LHFCWR / LHFRW-N / LHFRWR / LHFSWMF / LHFSW-N / LHFSW / LHZCE / LHZSW

Quantity	1~19	20~34	35~49	50~99
Rate	€ Unit Price	5%	10%	18%
Days to Ship	Standard	Quotation		

For orders larger than indicated quantity,

-Others

Quantity	1~19	20~34	35~49	50~99
Rate	€ Unit Price	5%	10%	18%
Days to Ship	Standard	Quotation		

For orders larger than indicated quantity,

dr	Round Flange LHZRW	LHFRW-N	LHFRW	LHFRWF	LHFRWR	LHFRWM	LHFRWMF	SLHFRW	SLHFRWS	Square Flange LHZSW	LHFSW-N	LHFSW	LHFSWF	LHFSWR	LHFSWM	LHFSWMF	SLHFSW	SLHFSWS	Compact Flange LHZCW	LHFCW-N	LHFCW	LHFCWF	LHFCWR	LHFCWM	LHFCWMF	SLHFCW	SLHFCWS
	€ Unit Price																										
3																											
4																											
5																											
6																											
8																											
10																											
12																											
13																											
16																											
20																											
25																											
30																											
35																											
40																											
50																											

Order Example

Part Number

LHFCW-N12 (No Seal)
LHFCWR10
- LHFCWR10L (L Type Greased)
- LHFCWR10G (G Type Greased)
- LHFCWR10H (H Type Greased)

Alternative grease types available.
For Days to Ship, Price and Performance, refer to P.272

Days to Ship

6 Days P.87

2 Days

Flanged Linear Bushings Compact Type

-Double-

NEW

CAD Data

Features: 4 to 5mm smaller in flange diameter (H Dimension) and 2mm smaller in outer diameter (D dimension) than Standard Type. Standard and Compact Comparison P.280

Compact Type

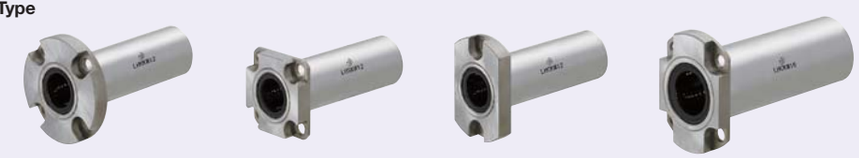

Type: Round Flange	Type: Square Flange	Type: Compact Flange	Outer Cylinder: M Material	Outer Cylinder: H Hardness	Outer Cylinder: S Surface Treatment	Steel balls: M Material	Retainer: M Material	Ambient Operating Temp.	A Accessory
LHRKW	LHSKW	LHCKW	1.3505/100Cr6	58HRC~	-	1.3505/100Cr6	Plastic (Duracon M90 equivalent)	-20~80°C	Seals M Material Nitrile Rubber (-20 ~120°C)
LHRKWM	LHSKWM	LHCKWM			Electroless Nickel Plating	1.4125/X105CRMO17 equivalent			

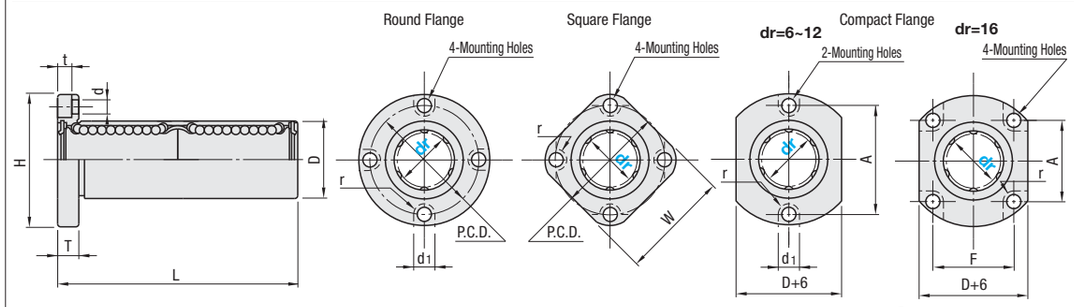

For ball row details, see P.280

dr	Tolerance	D	D Tolerance: Surface Treatment No	D Tolerance: Surface Treatment Yes	L	L Tolerance	H	T	d	d_1	t	r	P.C.D.	W	F	A	Eccentricity	* Perpendicularity	Basic Load Rating C (Dynamic) N	Basic Load Rating Co (Static) N	Allowable Static Moment (Nm)	Mass(g) Round Flange	Mass(g) Square Flange	Mass(g) Compact Flange
6	0 -0.01	10	- 0 0.011	- 0 0.015	35	±0.3	25	5	3.5	6	3.1	3	19	20	-	19	0.015	0.015	206	309	2.46	24	20	21
8		13	0 - 0.013	0 - 0.018	45		28						22	23	-	22			383	555	5.76	38	34	35
10		17			55		35	6	4.5	7.5	4.1	3.75	27	27	-	27			585	867	10.99	79	68	73
12		19	0 - 0.016	0 - 0.021	57		38						30	29	-	30			608	899	11.85	95	82	87
16		26			70		44						36	34	24	27			965	1431	23.48	154	135	141

For linear bushings, hardened shafts with g6 tolerance are recommended. P.107~195

* Perpendicularity of D part to flange mounting surface

kgf=Nx0.101972

Price

Quantity Discount Price (Round down to one Cent.) P.87

Quantity	1~19	20~34	35~49
Rate	€ Unit Price	5%	10%
Days to Ship	Standard	Quotation	

For orders larger than indicated quantity,

dr	€ Unit Price: Round Flange LHRKW	Round Flange LHRKWM	Square Flange LHSKW	Square Flange LHSKWM	Compact Flange LHCKW	Compact Flange LHCKWM
6						
8						
10						
12						
16						

Order Example

Part Number

LHRKW12
- LHRKW12L (L Type Greased)
- LHRKW12G (G Type Greased)
- LHRKW12H (H Type Greased)

Alternative grease types available.
For Days to Ship, Price and Performance, refer to P.272

Days to Ship

6 Days P.87

Example
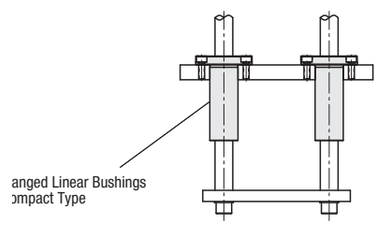
For 2 linear bushings of Compact type, their mounting plate is 6 to 10mm smaller than that for Standard Type.