Contact insert - VC-D3-ST50-PE - 1855034

Please be informed that the data shown in this PDF Document is generated from our Online Catalog. Please find the complete data in the user's documentation. Our General Terms of Use for Downloads are valid
(http://download.phoenixcontact.com)

Male contact carrier, for turned and rolled crimp contacts, type VC 3, 50-pos. + PE

Product Features

- Positions 15, 30, 50, and 65 are available, in accordance with housing sizes VC 1 - VC 4.
- Contact types meet the requirements of IEC 60352/DIN EN 60352
- Contact carriers have two further capacitive PE contacts
- Pin and socket contacts can be used on both the plug and device sides
- The connection data of 250 V/10 A corresponds to that of the HEAVYCON DD series

Key commercial data

package_quantity	10
GTIN	4017918159412

Technical data

Electrical characteristics

Note	Connectors may only be connected/disconnected when under no load.
Rated voltage	250 V
Rated voltage (III/3)	250 V
Rated current	10 A
Rated current	10 A
Rated surge voltage	4 kV
Number of positions	50

Ambient conditions

Ambient temperature (operation)	-40 °C ... 125 °C

Mechanical characteristics

Conductor cross section	0.14 mm² ... 1.5 mm² (stranded)
Connection cross section AWG	22 ... 16
Stripping length of the individual wire	8 mm
Conductor cross section stranded max.	1.5 mm²
Insertion/withdrawal cycles	>= 500

General

Design	VC3

Contact insert - VC-D3-ST50-PE - 1855034

Technical data

General

Series	VC-D
Connection method	Crimp connection
Inflammability class according to UL 94	V0
Pollution degree	2
Surge voltage category	III

Material data

Contact carrier material	PA-GF

classifications

eCl@ss

eCl@ss 4.0	27140816
eCl@ss 4.1	27140816
eCl@ss 5.0	27143424
eCl@ss 5.1	27143424
eCl@ss 6.0	27143424
eCl@ss 7.0	27440209
eCl@ss 8.0	27440209

ETIM

ETIM 2.0	EC000438
ETIM 3.0	EC000438
ETIM 4.0	EC000438
ETIM 5.0	EC000438

UNSPSC

UNSPSC 6.01	30211923
UNSPSC 7.0901	39121522
UNSPSC 11	39121522
UNSPSC 12.01	39121522
UNSPSC 13.2	39121522

approvals

UL Recognized / cUL Recognized / GOST / GOST / cULus Recognized /

Approval details

UL Recognized

Contact insert - VC-D3-ST50-PE - 1855034

approvals

Nominal voltage UN	250 V
Nominal current IN	4 A
mm²/AWG/kcmil	

cUL Recognized

Nominal voltage UN	250 V
Nominal current IN	4 A
mm²/AWG/kcmil	

GOST

cULus Recognized

accessories

Panel mounting flange

VC-D-AF - 1855319

Crimp contact

CK1,6-ED-0,37BU AG - 1663394

Contact insert - VC-D3-ST50-PE - 1855034

accessories

CK1,6-ED-0,37BU AU - 1674969

CK1,6-ED-0,50BU AG - 1663404

CK1,6-ED-0,50BU AU - 1674480

CK1,6-ED-0,75BU AG - 1663417

CK1,6-ED-0,75BU AU - 1672440

CK1,6-ED-1,00BU AG - 1663420

Contact insert - VC-D3-ST50-PE - 1855034

accessories

CK1,6-ED-1,00BU AU - 1674943

CK1,6-ED-1,50BU AG - 1663433

CK1,6-ED-1,50BU AU - 1674930

CK1,6-ED-0,37ST AG - 1663336

CK1,6-ED-0,37ST AU - 1674901

Contact insert - VC-D3-ST50-PE - 1855034

accessories

CK1,6-ED-0,50ST AG - 1663349

CK1,6-ED-0,50ST AU - 1672453

CK1,6-ED-0,75ST AG - 1663352

CK1,6-ED-0,75ST AU - 1674914

CK1,6-ED-1,00ST AG - 1663365

CK1,6-ED-1,00ST AU - 1674888

Contact insert - VC-D3-ST50-PE - 1855034

accessories

CK1,6-ED-1,50ST AG - 1663378

CK1,6-BR-0,50ST AG - 1884157

CK1,6-BR-1,50ST AG - 1884144

CK1,6-BR-0,50BU AG - 1884186

CK1,6-ER-0,50ST AG - 1884092

Contact insert - VC-D3-ST50-PE - 1855034

accessories

CK1,6-ER-1,50ST AG - 1884089

CK1,6-ER-0,50BU AG - 1884128

Fiber optics contact

CK1,6-ED-BU-POF - 1885004

CK1,6-ED-ST-POF - 1884995

Crimping tool

CRIMPFOX-1,6/2,5-ED-4,0 - 1687419

Contact insert - VC-D3-ST50-PE - 1855034

accessories

CRIMPFOX-1,6-ER-1,50-AT - 1884843

Assembly tool

VC-EW 1,6 - 1884869

CK1,6/2,5-MWZ - 1676734

accessories

CRIMPFOX-1,6-ED-POF - 1885017

Drawings

Contact insert - VC-D3-ST50-PE - 1855034

Dimensioned drawing

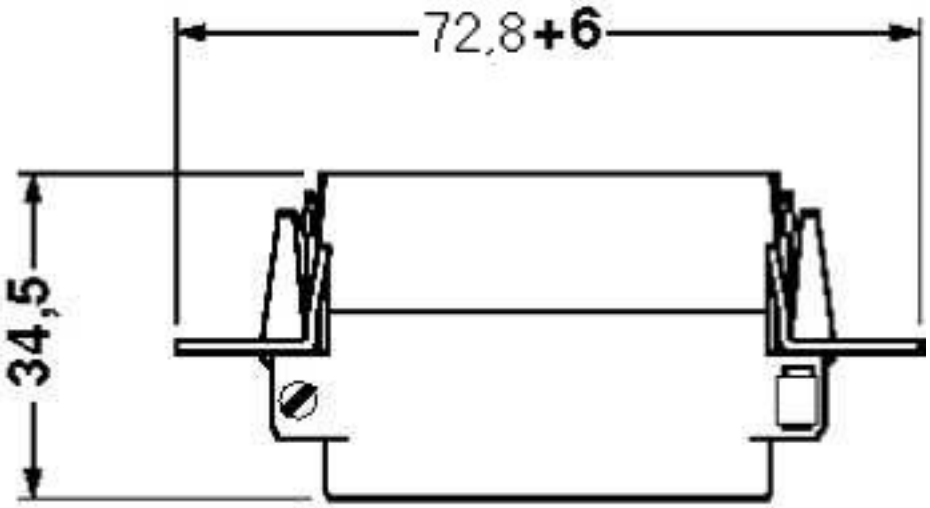

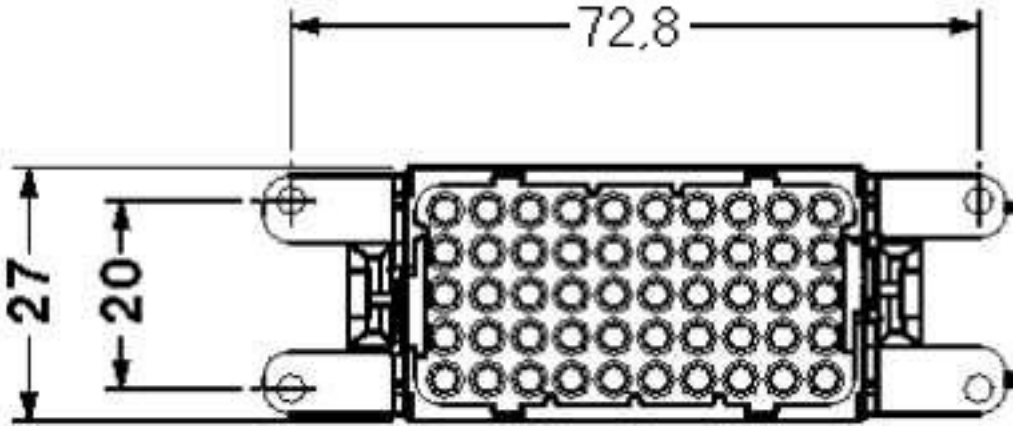

Contact insert

Contact insert - VC-D3-ST50-PE - 1855034

Dimensioned drawing

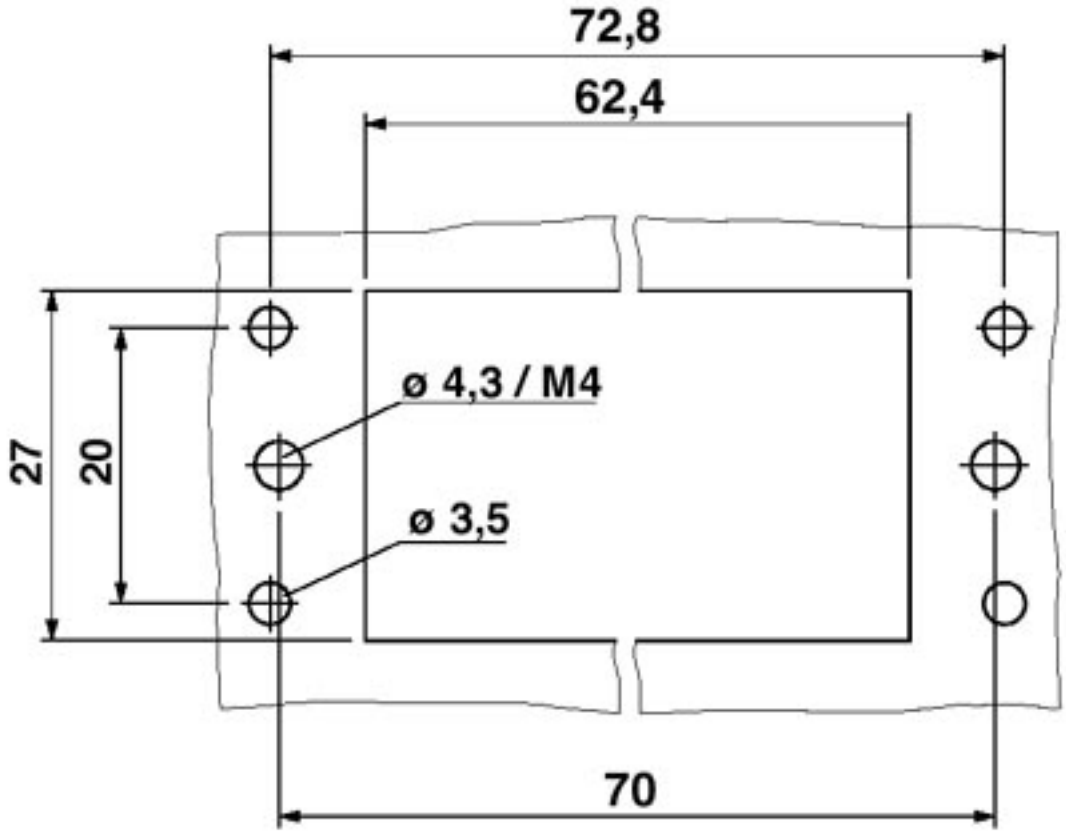

Panel cutout

© Phoenix Contact 2013 - all rights reserved
http://www.phoenixcontact.com