**Data sheet | Item number: 2000-5311/1102-950**

3-conductor sensor terminal block; LED (yellow); for PNP-(high-side) switching sensors; 1 mm²; Push-in CAGE CLAMP®

www.wago.com/2000-5311/1102-950

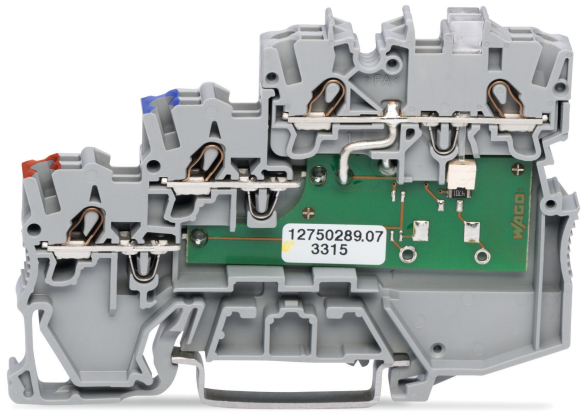


RoHS ✓ Compliant

BOMcheck.net

Color:

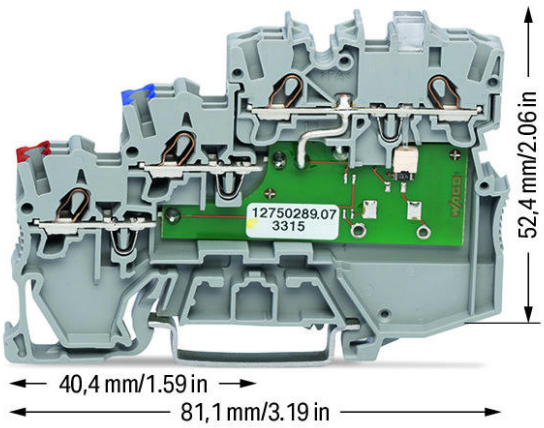


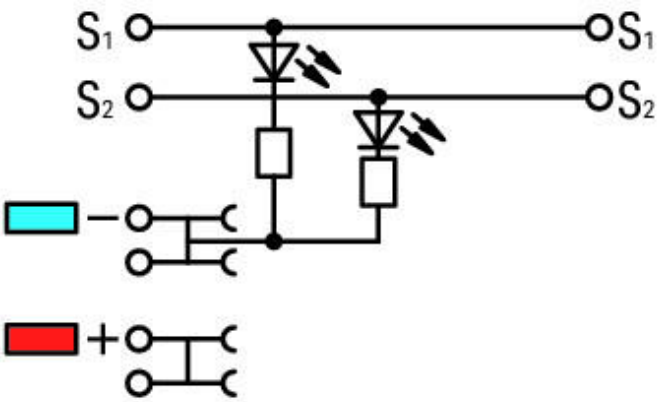


## Item description

3.5 mm spacing per signal (2 x 3.5 mm = 7 mm)

The double spacing per pole of this terminal block series maximizes connectivity. For example, ten sensors may be connected using only five sensor terminal blocks plus a power supply terminal block.

## Data

### Electrical data

| | |
|---|---|
| Voltage type (1) | DC |
| Nominal voltage | 24 V |

### Ratings per IEC/EN 60664-1

| | |
|---|---|
| Rated current | 13.5 A |
| Legend (ratings) | (III / 3) ≙ Overvoltage category III / Pollution degree 3 |

### Approvals per UL 1059

| | |
|---|---|
| Rated voltage UL (Use Group C) | 24 V |
| Rated current UL (Use Group C) | 15 A |

### Approvals per CSA

| | |
|---|---|
| Rated voltage CSA (Use Group C) | 24 V |
| Rated current CSA (Use Group C) | 10 A |

### Connection data

| | |
|---|---|
| Connection technology | Push-in CAGE CLAMP® |
| Actuation type | Push-in<br>Operating tool |
| Connectable conductor materials | Copper |
| Nominal cross section | 1 mm² |
| Solid conductor | 0.14 … 1.5 mm² / 24 … 16 AWG |
| Solid conductor, push-in termination | 0.5 … 1.5 mm² / 20 … 16 AWG |
| Fine-stranded conductor | 0.14 … 1.5 mm² / 24 … 16 AWG |
| Fine-stranded conductor with ferrule, push-in termination, from | 0.5 mm² / 20 AWG |
| Strip length | 9 … 11 mm / 0.35 … 0.43 Inch |
| Total number of connection points | 8 |
| Total number of potentials | 4 |
| Type of wiring | Front-entry wiring |

### Geometrical Data

| | |
|---|---|
| Width | 7 mm / 0.276 inch |
| Height from upper-edge of DIN-35 rail | 52.4 mm / 2.063 inch |

## Mechanical data

| | |
|---|---|
| Design | horizontal |
| Type of mounting | DIN-35 rail |
| Marking level | Center/side marking |

## Material Data

| | |
|---|---|
| Color | gray |
| Insulating material | Polyamide 66 (PA 66) |
| Weight | 16.792 g |

## Commercial data

| | |
|---|---|
| Country of origin | DE |
| GTIN | 4055143452892 |
| Customs Tariff No. | 85369010000 |

## Approvals / Certificates

### Country specific Approvals

| Logo | Approval | Certificate name |
|---|---|---|
| | **CCA**<br>DEKRA Certification B.V. | 71-102841 |
| | **CCA**<br>DEKRA Certification B.V. | NTR NL 7671 |
| | **CSA**<br>DEKRA Certification B.V. | 2130762 |

### UL-Approvals

| Logo | Approval | Certificate name |
|---|---|---|
| | **UL**<br>UL International Germany GmbH | E45172 sec.55 |

## Compatible products

### General accessories

| | | |
|---|---|---|
| | **Item no.: 2000-121**<br>Adaptor | www.wago.com/2000-121 |

## Jumper

| | | |
|---|---|---|
| | **Item no.: 2000-402**<br>Push-in type jumper bar; insulated; 2-way; Nominal current 14 A | www.wago.com/2000-402 |
| | **Item no.: 2000-402/000-005**<br>Push-in type jumper bar; insulated; 2-way; Nominal current 14 A | www.wago.com/2000-402/000-005 |
| | **Item no.: 2000-402/000-006**<br>Push-in type jumper bar; insulated; 2-way; Nominal current 14 A | www.wago.com/2000-402/000-006 |
| | **Item no.: 2000-402/000-018**<br>Push-in type jumper bar; insulated; 2-way; Nominal current 14 A | www.wago.com/2000-402/000-018 |
| | **Item no.: 2000-403**<br>Push-in type jumper bar; insulated; 3-way; Nominal current 14 A | www.wago.com/2000-403 |
| | **Item no.: 2000-403/000-005**<br>Push-in type jumper bar; insulated; 3-way; Nominal current 14 A | www.wago.com/2000-403/000-005 |
| | **Item no.: 2000-403/000-006**<br>Push-in type jumper bar; insulated; 3-way; Nominal current 14 A | www.wago.com/2000-403/000-006 |
| | **Item no.: 2000-404**<br>Push-in type jumper bar; insulated; 4-way; Nominal current 14 A | www.wago.com/2000-404 |
| | **Item no.: 2000-404/000-005**<br>Push-in type jumper bar; insulated; 4-way; Nominal current 14 A | www.wago.com/2000-404/000-005 |
| | **Item no.: 2000-404/000-006**<br>Push-in type jumper bar; insulated; 4-way; Nominal current 14 A | www.wago.com/2000-404/000-006 |
| | **Item no.: 2000-405**<br>Push-in type jumper bar; insulated; 5-way; Nominal current 14 A | www.wago.com/2000-405 |
| | **Item no.: 2000-405/000-005**<br>Push-in type jumper bar; insulated; 5-way; Nominal current 14 A | www.wago.com/2000-405/000-005 |
| | **Item no.: 2000-405/000-006**<br>Push-in type jumper bar; insulated; 5-way; Nominal current 14 A | www.wago.com/2000-405/000-006 |
| | **Item no.: 2000-405/011-000**<br>Star point jumper; insulated; 3-way (1-3-5); IN = IN terminal block | www.wago.com/2000-405/011-000 |
| | **Item no.: 2000-406**<br>Push-in type jumper bar; insulated; 6-way; Nominal current 14 A | www.wago.com/2000-406 |

| | | |
|---|---|---|
| | **Item no.: 2000-406/000-005**<br>Push-in type jumper bar; insulated; 6-way; Nominal current 14 A | www.wago.com/2000-406/000-005 |
| | **Item no.: 2000-406/000-006**<br>Push-in type jumper bar; insulated; 6-way; Nominal current 14 A | www.wago.com/2000-406/000-006 |
| | **Item no.: 2000-406/020-000**<br>Delta jumper; insulated; 1-2 3-4 5-6; IN = IN terminal block | www.wago.com/2000-406/020-000 |
| | **Item no.: 2000-407**<br>Push-in type jumper bar; insulated; 7-way; Nominal current 14 A | www.wago.com/2000-407 |
| | **Item no.: 2000-407/000-005**<br>Push-in type jumper bar; insulated; 7-way; Nominal current 14 A | www.wago.com/2000-407/000-005 |
| | **Item no.: 2000-407/000-006**<br>Push-in type jumper bar; insulated; 7-way; Nominal current 14 A | www.wago.com/2000-407/000-006 |
| | **Item no.: 2000-408**<br>Push-in type jumper bar; insulated; 8-way; Nominal current 14 A | www.wago.com/2000-408 |
| | **Item no.: 2000-408/000-005**<br>Push-in type jumper bar; insulated; 8-way; Nominal current 14 A | www.wago.com/2000-408/000-005 |
| | **Item no.: 2000-408/000-006**<br>Push-in type jumper bar; insulated; 8-way; Nominal current 14 A | www.wago.com/2000-408/000-006 |
| | **Item no.: 2000-409**<br>Push-in type jumper bar; insulated; 9-way; Nominal current 14 A | www.wago.com/2000-409 |
| | **Item no.: 2000-409/000-005**<br>Push-in type jumper bar; insulated; 9-way; Nominal current 14 A | www.wago.com/2000-409/000-005 |
| | **Item no.: 2000-409/000-006**<br>Push-in type jumper bar; insulated; 9-way; Nominal current 14 A | www.wago.com/2000-409/000-006 |
| | **Item no.: 2000-410**<br>Push-in type jumper bar; insulated; 10-way; Nominal current 14 A | www.wago.com/2000-410 |
| | **Item no.: 2000-410/000-005**<br>Push-in type jumper bar; insulated; 10-way; Nominal current 14 A | www.wago.com/2000-410/000-005 |
| | **Item no.: 2000-410/000-006**<br>Push-in type jumper bar; insulated; 10-way; Nominal current 14 A | www.wago.com/2000-410/000-006 |
| | **Item no.: 2000-433**<br>Push-in type jumper bar; insulated; from 1 to 3; Nominal current 14 A | www.wago.com/2000-433 |

| | | |
|---|---|---|
| | **Item no.: 2000-433/000-005**<br>Push-in type jumper bar; insulated; from 1 to 3; Nominal current 14 A | www.wago.com/2000-433/000-005 |
| | **Item no.: 2000-433/000-006**<br>Push-in type jumper bar; insulated; from 1 to 3; Nominal current 14 A | www.wago.com/2000-433/000-006 |
| | **Item no.: 2000-434**<br>Push-in type jumper bar; insulated; from 1 to 4; Nominal current 14 A | www.wago.com/2000-434 |
| | **Item no.: 2000-435**<br>Push-in type jumper bar; insulated; from 1 to 5; Nominal current 14 A | www.wago.com/2000-435 |
| | **Item no.: 2000-436**<br>Push-in type jumper bar; insulated; from 1 to 6; Nominal current 14 A | www.wago.com/2000-436 |
| | **Item no.: 2000-437**<br>Push-in type jumper bar; insulated; from 1 to 7; Nominal current 14 A | www.wago.com/2000-437 |
| | **Item no.: 2000-438**<br>Push-in type jumper bar; insulated; from 1 to 8; Nominal current 14 A | www.wago.com/2000-438 |
| | **Item no.: 2000-439**<br>Push-in type jumper bar; insulated; from 1 to 9; Nominal current 14 A | www.wago.com/2000-439 |
| | **Item no.: 2000-440**<br>Push-in type jumper bar; insulated; from 1 to 10; Nominal current 14 A | www.wago.com/2000-440 |
| | **Item no.: 2009-402**<br>Push-in type wire jumper; insulated; wire length 60 mm; Conductor cross section 0.75 mm²; suitable for 2000 and 2020 Series rail-mounted terminal blocks | www.wago.com/2009-402 |
| | **Item no.: 2009-404**<br>Push-in type wire jumper; insulated; wire length 110 mm; Conductor cross section 0.75 mm²; suitable for 2000 and 2020 Series rail-mounted terminal blocks | www.wago.com/2009-404 |
| | **Item no.: 2009-406**<br>Push-in type wire jumper; insulated; wire length 250 mm; Conductor cross section 0.75 mm²; suitable for 2000 and 2020 Series rail-mounted terminal blocks | www.wago.com/2009-406 |
| | **Item no.: 210-103**<br>Wire commoning chain; insulated; 50 connections | www.wago.com/210-103 |
| 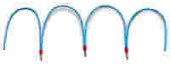 | **Item no.: 210-123**<br>Wire commoning chain; insulated; 50 connections | www.wago.com/210-123 |

**Marking accessories**

| | | |
|---|---|---|
| | **Item no.: 2009-110**<br>Marking strips; on reel; not stretchable; plain; snap-on type | www.wago.com/2009-110 |
| | **Item no.: 2009-113**<br>WMB-Inline; for smartPRINTER; on reel; plain; snap-on type | www.wago.com/2009-113 |
| | **Item no.: 2009-113/000-002**<br>WMB-Inline; for smartPRINTER; on reel; plain; snap-on type | www.wago.com/2009-113/000-002 |

| | | |
|---|---|---|
| | **Item no.: 2009-113/000-005**<br>WMB-Inline; for smartPRINTER; on reel; plain; snap-on type | www.wago.com/2009-113/000-005 |
| | **Item no.: 2009-113/000-006**<br>WMB-Inline; for smartPRINTER; on reel; plain; snap-on type | www.wago.com/2009-113/000-006 |
| | **Item no.: 2009-113/000-007**<br>WMB-Inline; for smartPRINTER; on reel; plain; snap-on type | www.wago.com/2009-113/000-007 |
| | **Item no.: 2009-113/000-012**<br>WMB-Inline; for smartPRINTER; on reel; plain; snap-on type | www.wago.com/2009-113/000-012 |
| | **Item no.: 2009-113/000-017**<br>WMB-Inline; for smartPRINTER; on reel; plain; snap-on type | www.wago.com/2009-113/000-017 |
| | **Item no.: 2009-113/000-023**<br>WMB-Inline; for smartPRINTER; on reel; plain; snap-on type | www.wago.com/2009-113/000-023 |
| | **Item no.: 2009-113/000-024**<br>WMB-Inline; for smartPRINTER; on reel; plain; snap-on type | www.wago.com/2009-113/000-024 |
| | **Item no.: 2009-191**<br>Group marker carrier | www.wago.com/2009-191 |
|  | **Item no.: 793-3501**<br>WMB marking card; as card; plain; snap-on type | www.wago.com/793-3501 |

**Protective Warning Marker**

| | | |
|---|---|---|
| | **Item no.: 2000-115**<br>Protective warning marker; with high-voltage symbol, black; for 5 terminal blocks | www.wago.com/2000-115 |

**check**

| | | |
|---|---|---|
| | **Item no.: 2000-510**<br>TOPJOB®S L-type test plug module; modular; for jumper contact slot | www.wago.com/2000-510 |
| | **Item no.: 2000-552**<br>Modular TOPJOB®S connector; modular; for jumper contact slot; 2-pole | www.wago.com/2000-552 |
| | **Item no.: 2000-553**<br>Modular TOPJOB®S connector; modular; for jumper contact slot; 3-pole | www.wago.com/2000-553 |
| | **Item no.: 2000-554**<br>Modular TOPJOB®S connector; modular; for jumper contact slot; 4-pole | www.wago.com/2000-554 |
| | **Item no.: 2000-555**<br>Modular TOPJOB®S connector; modular; for jumper contact slot; 5-pole | www.wago.com/2000-555 |
| | **Item no.: 2000-556**<br>Modular TOPJOB®S connector; modular; for jumper contact slot; 6-pole | www.wago.com/2000-556 |

| | | |
|---|---|---|
| | **Item no.: 2000-557**<br>Modular TOPJOB®S connector; modular; for jumper contact slot; 7-pole | www.wago.com/2000-557 |
| | **Item no.: 2000-558**<br>Modular TOPJOB®S connector; modular; for jumper contact slot; 8-pole | www.wago.com/2000-558 |
| | **Item no.: 2000-559**<br>Modular TOPJOB®S connector; modular; for jumper contact slot; 9-pole | www.wago.com/2000-559 |
| | **Item no.: 2000-560**<br>Modular TOPJOB®S connector; modular; for jumper contact slot; 10-pole | www.wago.com/2000-560 |
| | **Item no.: 2009-174**<br>Test plug adapter; for 4 mm Ø test plugs; for testing TOPJOB®S rail-mounted terminal blocks | www.wago.com/2009-174 |
| | **Item no.: 2009-182**<br>Testing tap; for max. 2.5 mm²; tool-free connection for individual test wires 0.08 - 2.5 mm | www.wago.com/2009-182 |
| | **Item no.: 210-136**<br>Test plug; 2 mm Ø; with 500 mm cable | www.wago.com/210-136 |
| | **Item no.: 210-137**<br>Test plug; 2.3 mm Ø; with 500 mm cable | www.wago.com/210-137 |

**ferrule**

| | | |
|---|---|---|
| | **Item no.: 216-241**<br>Ferrule; Sleeve for 0.5 mm² / AWG 22; insulated; electro-tin plated; electrolytic copper; gastight crimped; acc. to DIN 46228, Part 4/09.90 | www.wago.com/216-241 |
| | **Item no.: 216-242**<br>Ferrule; Sleeve for 0.75 mm² / AWG 20; insulated; electro-tin plated; electrolytic copper; gastight crimped; acc. to DIN 46228, Part 4/09.90 | www.wago.com/216-242 |
| | **Item no.: 216-243**<br>Ferrule; Sleeve for 1 mm² / AWG 18; insulated; electro-tin plated; electrolytic copper; gastight crimped; acc. to DIN 46228, Part 4/09.90 | www.wago.com/216-243 |

**tools**

| | | |
|---|---|---|
| | **Item no.: 210-647**<br>Operating tool with partially insulated shaft; Blade (2.5 x 0.4) mm; short | www.wago.com/210-647 |
| | **Item no.: 210-648**<br>Operating tool with partially insulated shaft; Blade (2.5 x 0.4) mm; short; angled | www.wago.com/210-648 |
| | **Item no.: 210-719**<br>Operating tool with partially insulated shaft; Type 1, blade (2.5 x 0.4) mm | www.wago.com/210-719 |

**Carrier rail**

| | | |
|---|---|---|
| | **Item no.: 210-112**<br>Steel carrier rail; 35 x 7.5 mm; 1 mm thick; 2 m long; slotted; according to EN 60715; "Hole width 25 mm | www.wago.com/210-112 |
| 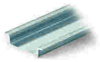 | **Item no.: 210-113**<br>Steel carrier rail; 35 x 7.5 mm; 1 mm thick; 2 m long; unslotted; according to EN 60715 | www.wago.com/210-113 |
| | **Item no.: 210-114**<br>Steel carrier rail; 35 x 15 mm; 1.5 mm thick; 2 m long; unslotted; similar to EN 60715 | www.wago.com/210-114 |

| | | |
|---|---|---|
| | **Item no.: 210-115**<br>Steel carrier rail; 35 x 7.5 mm; 1 mm thick; 2 m long; slotted; according to EN 60715; "Hole width 18 mm | www.wago.com/210-115 |
| | **Item no.: 210-118**<br>Steel carrier rail; 35 x 15 mm; 2.3 mm thick; 2 m long; unslotted; according to EN 60715 | www.wago.com/210-118 |
| | **Item no.: 210-196**<br>Aluminum carrier rail; 35 x 8.2 mm; 1.6 mm thick; 2 m long; unslotted; similar to EN 60715 | www.wago.com/210-196 |
| | **Item no.: 210-197**<br>Steel carrier rail; 35 x 15 mm; 1.5 mm thick; 2 m long; slotted; similar to EN 60715 | www.wago.com/210-197 |
| | **Item no.: 210-198**<br>Copper carrier rail; 35 x 15 mm; 2.3 mm thick; 2 m long; unslotted; according to EN 60715 | www.wago.com/210-198 |

**End plate**

| | | |
|---|---|---|
| | **Item no.: 2000-5391**<br>End and intermediate plate; 1 mm thick; for 3-conductor terminal blocks | www.wago.com/2000-5391 |

## Downloads

### Documentation

**Bid Text**

| | | | |
|---|---|---|---|
| 2000-5311/1102-950 | Aug 13, 2018 | DOCX<br>15.4 kB | Download |

### smartDATA

**CAD data**

| | | |
|---|---|---|
| 3D Download 2000-5311/1102-950 | URL | Download |

Subject to changes.

WAGO Kontakttechnik GmbH & Co. KG
Hansastr. 27
32423 Minden
Phone: +49571 887-0 | Fax: +49571 887-169
Email: info.de@wago.com | Web: www.wago.com

Do you have any questions about our products?
We are always happy to take your call at +49 (571) 887-44222.