Data sheet | Item number: 722-236/039-000

THT female header; 0.6 x 1.0 mm solder pin; angled; 100% protected against mismating; Locking lever; Pin spacing 5 mm; 6-pole

www.wago.com/722-236/039-000

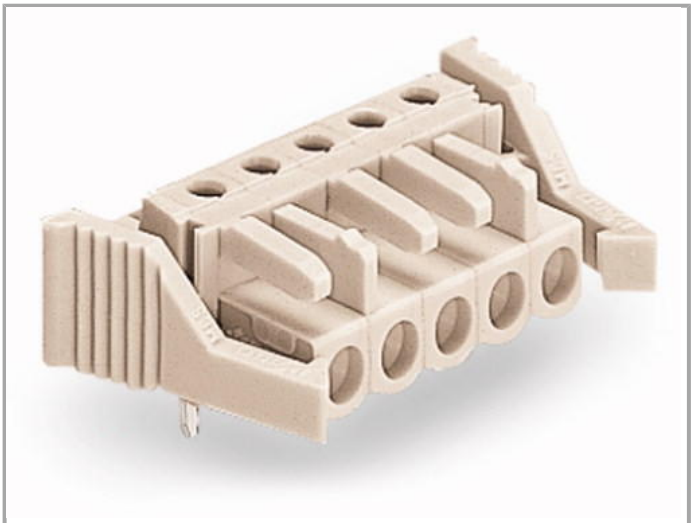

RoHS ✓ Compliant

BOMcheck.net

Color:

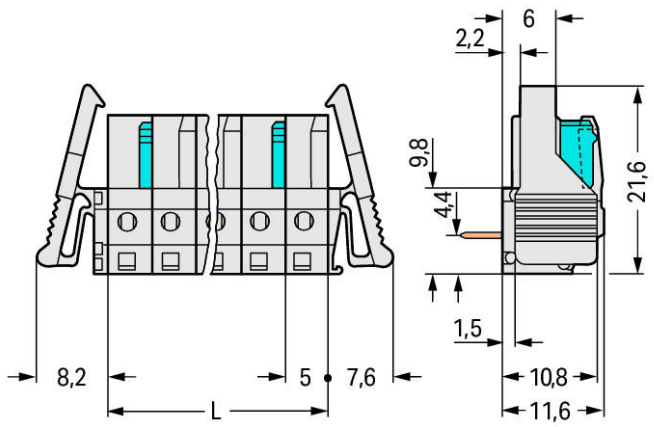

L = pole no. x pin spacing

2-pole female connectors – one latch only

Item description

- Horizontal or vertical PCB mounting via straight or angled solder pins
- For board-to-board and board-to-wire connections
- Touch-proof PCB outputs
- Easy-to-identify PCB inputs and outputs
- 100 % protected against mismating
- With coding fingers

Other variants can be requested via the WAGO sales department or, if necessary, configured at https://configurator.wago.com/: 3.8 mm pin projection for male headers with straight solder pins,Gold-plated or partially gold-plated contact surfaces,Other pole numbers

Data

Electrical data

Ratings per IEC/EN 60664-1

Rated voltage (III / 3)	320 V
Rated impulse voltage (III / 3)	4 kV
Rated voltage (III / 2)	320 V

Rated impulse voltage (III / 2)	4 kV
Rated voltage (II / 2)	630 V
Rated impulse voltage (II / 2)	4 kV
Rated current	12 A
Legend (ratings)	(III / 2) ≙ Overvoltage category III / Pollution degree 2

Approvals per UL 1059

Rated voltage UL (Use Group B)	300 V
Rated current UL (Use Group B)	15 A
Rated voltage UL (Use Group D)	300 V
Rated current UL (Use Group D)	10 A

Approvals per CSA

Rated voltage CSA (Use Group B)	300 V
Rated current CSA (Use Group B)	15 A
Rated voltage CSA (Use Group D)	300 V
Rated current CSA (Use Group D)	10 A

Connection data

No. of poles	6
Total number of potentials	6
Number of levels	1

Geometrical Data

Pin spacing	5 mm (0.197 inch)
Width	45.8 mm / 1.803 inch
Height	16.6 mm / 0.654 inch
Height from the surface	11.6 mm / 0.457 inch
Depth	18.25 mm / 0.719 inch
Solder pin length	5 mm
Solder pin dimensions	0.6 x 1 mm
Drilled hole diameter (tolerance)	$1.3^{(+0.1)}$ mm

Plug connection

Contact type (pluggable connector)	Female connector/socket
Connector connection type	for PCBs
Mismating protection	Yes
Mating direction to the PCB	0 °
Locking of plug-in connection	locking lever

PCB contact

PCB contact	THT
Solder pin arrangement	over the entire female connector, in line
Number of solder pins per potential	1

Material Data

Color	light gray
Material group	I
Insulating material	Polyamide 66 (PA 66)
Flammability class per UL94	V0
Contact material	Copper alloy
Contact plating	tin-plated
Fire load	0.119 MJ
Weight	6.5 g

Environmental Requirements

Limit temperature range	-60 … +85 °C

Commercial data

Country of origin	DE
GTIN	4044918580694
Customs Tariff No.	85366990990
Product Group	3 (Multi Conn. System)

Approvals / Certificates

UL-Approvals

Logo	Approval	Certificate name
	UR UL International Germany GmbH	E45171

Compatible products

Marking accessories

	Item no.: 210-833 Marking strips; on reel; 6 mm wide; plain; Self-adhesive	www.wago.com/210-833
	Item no.: 210-834 Marking strips; on reel; 5 mm wide; plain; Self-adhesive	www.wago.com/210-834

check

	Item no.: 210-136 Test plug; 2 mm Ø; with 500 mm cable	www.wago.com/210-136
	Item no.: 210-137 Test plug; 2.3 mm Ø; with 500 mm cable	www.wago.com/210-137
	Item no.: 231-661 Test plugs for female connectors; for 5 mm and 5.08 mm pin spacing	www.wago.com/231-661

Downloads

smartDATA

PCB libraries

DesignSpark Library for WAGO Pluggable PCB Connectors (MULTI CONNECTION SYSTEM) Compatible with DesignSpark PCB Version 4.x or higher	2.1 Oct 6, 2014	ZIP 6.1 MB	Download
TARGET Library for WAGO Pluggable PCB Connectors (Multi-Connection System) Compatible with TARGET PCB Design Software Version 17.x	1.1.0 Oct 6, 2014	ZIP 7.4 MB	Download
EAGLE Library for WAGO Pluggable PCB Connectors (MULTI CONNECTION SYSTEM) Compatible with EAGLE PCB Design Software Version 6.x or higher	2.1 Nov 17, 2017	ZIP 6.2 MB	Download

CAD data

3D Download 722-236/039-000	URL	Download

Subject to changes.

WAGO Kontakttechnik GmbH & Co. KG
Hansastr. 27
32423 Minden
Phone: +49571 887-0 | Fax: +49571 887-169
Email: info.de@wago.com | Web: www.wago.com

Do you have any questions about our products?
We are always happy to take your call at +49 (571) 887-44222.