# Data sheet | Item number: 722-246/039-000

THT female header; 0.6 x 1.0 mm solder pin; angled; 100% protected against mismating; Locking lever; Pin spacing 5 mm; 16-pole

www.wago.com/722-246/039-000

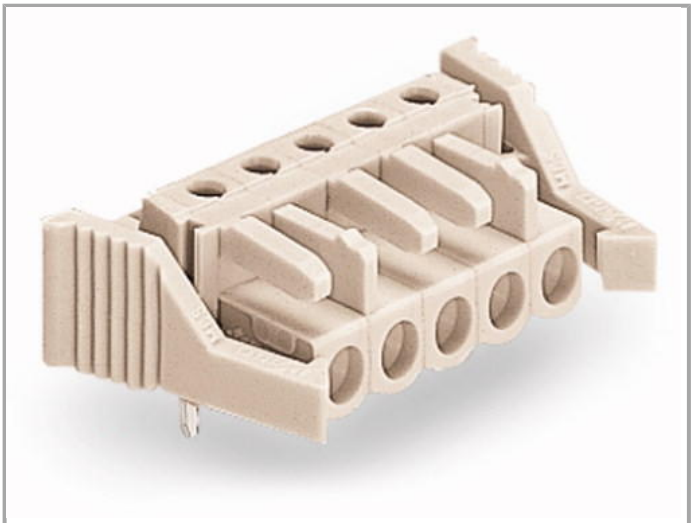

RoHS Compliant ✓ BOMcheck.net **Color:**

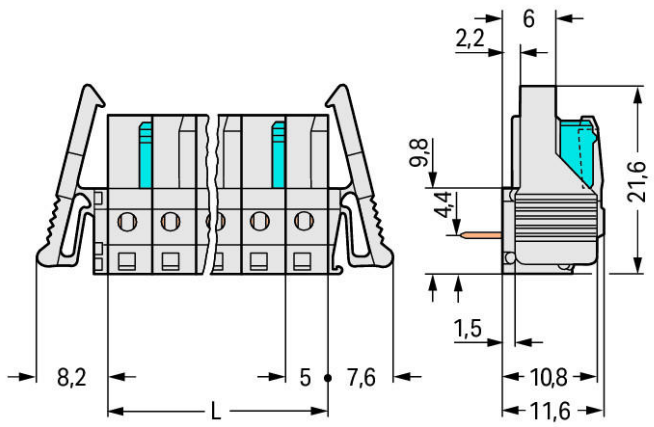


L = pole no. x pin spacing

2-pole female connectors – one latch only

## Item description

- Horizontal or vertical PCB mounting via straight or angled solder pins
- For board-to-board and board-to-wire connections
- Touch-proof PCB outputs
- Easy-to-identify PCB inputs and outputs
- 100 % protected against mismating
- With coding fingers

**Other variants can be requested via the WAGO sales department or, if necessary, configured at https://configurator.wago.com/:** 3.8 mm pin projection for male headers with straight solder pins,Gold-plated or partially gold-plated contact surfaces,Other pole numbers

## Data

### Electrical data

#### Ratings per IEC/EN 60664-1

| | |
|---|---|
| Rated voltage (III / 3) | 320 V |
| Rated impulse voltage (III / 3) | 4 kV |
| Rated voltage (III / 2) | 320 V |

| | |
|---|---|
| Rated impulse voltage (III / 2) | 4 kV |
| Rated voltage (II / 2) | 630 V |
| Rated impulse voltage (II / 2) | 4 kV |
| Rated current | 12 A |
| Legend (ratings) | (III / 2) ≙ Overvoltage category III / Pollution degree 2 |

## Approvals per UL 1059

| | |
|---|---|
| Rated voltage UL (Use Group B) | 300 V |
| Rated current UL (Use Group B) | 15 A |
| Rated voltage UL (Use Group D) | 300 V |
| Rated current UL (Use Group D) | 10 A |

## Approvals per CSA

| | |
|---|---|
| Rated voltage CSA (Use Group B) | 300 V |
| Rated current CSA (Use Group B) | 15 A |
| Rated voltage CSA (Use Group D) | 300 V |
| Rated current CSA (Use Group D) | 10 A |

## Connection data

| | |
|---|---|
| No. of poles | 16 |
| Total number of potentials | 16 |
| Number of levels | 1 |

## Geometrical Data

| | |
|---|---|
| Pin spacing | 5 mm (0.197 inch) |
| Width | 95.8 mm / 3.772 inch |
| Height | 16.6 mm / 0.654 inch |
| Height from the surface | 11.6 mm / 0.457 inch |
| Depth | 18.25 mm / 0.719 inch |
| Solder pin length | 5 mm |
| Solder pin dimensions | 0.6 x 1 mm |
| Drilled hole diameter (tolerance) | $1.3^{(+0.1)}$ mm |

## Plug connection

| | |
|---|---|
| Contact type (pluggable connector) | Female connector/socket |
| Connector connection type | for PCBs |
| Mismating protection | Yes |
| Mating direction to the PCB | 0 ° |
| Locking of plug-in connection | locking lever |

## PCB contact

| | |
|---|---|
| PCB contact | THT |
| Solder pin arrangement | over the entire female connector, in line |
| Number of solder pins per potential | 1 |

## Material Data

| | |
|---|---|
| Color | light gray |
| Material group | I |
| Insulating material | Polyamide 66 (PA 66) |
| Flammability class per UL94 | V0 |
| Contact material | Copper alloy |
| Contact plating | tin-plated |
| Fire load | 0.269 MJ |
| Weight | 15.7 g |

## Environmental Requirements

| | |
|---|---|
| Limit temperature range | -60 … +85 °C |

## Commercial data

| | |
|---|---|
| Country of origin | DE |
| GTIN | 4044918580816 |
| Customs Tariff No. | 85366990990 |
| Product Group | 3 (Multi Conn. System) |

## Approvals / Certificates

### UL-Approvals

| Logo | Approval | Certificate name |
|---|---|---|
| | **UR**<br>UL International Germany GmbH | E45171 |

## Compatible products

**check**

| | | |
|---|---|---|
| | **Item no.: 210-136**<br>Test plug; 2 mm Ø; with 500 mm cable | www.wago.com/210-136 |
| | **Item no.: 210-137**<br>Test plug; 2.3 mm Ø; with 500 mm cable | www.wago.com/210-137 |
| | **Item no.: 231-661** | |

Test plugs for female connectors; for 5 mm and 5.08 mm pin spacing www.wago.com/231-661

### Marking accessories

**Item no.: 210-833**
Marking strips; on reel; 6 mm wide; plain; Self-adhesive www.wago.com/210-833

**Item no.: 210-834**
Marking strips; on reel; 5 mm wide; plain; Self-adhesive www.wago.com/210-834

## Downloads

### smartDATA

#### PCB libraries

| | | | |
|---|---|---|---|
| TARGET Library for WAGO Pluggable PCB Connectors (Multi-Connection System)<br>Compatible with TARGET PCB Design Software Version 17.x | 1.1.0<br>Oct 6, 2014 | ZIP<br>7.4 MB | Download |
| EAGLE Library for WAGO Pluggable PCB Connectors (MULTI CONNECTION SYSTEM)<br>Compatible with EAGLE PCB Design Software Version 6.x or higher | 2.1<br>Nov 17, 2017 | ZIP<br>6.2 MB | Download |
| DesignSpark Library for WAGO Pluggable PCB Connectors (MULTI CONNECTION SYSTEM)<br>Compatible with DesignSpark PCB Version 4.x or higher | 2.1<br>Oct 6, 2014 | ZIP<br>6.1 MB | Download |

#### CAD data

| | | | |
|---|---|---|---|
| 3D Download 722-246/039-000 | | URL | Download |

Subject to changes.

WAGO Kontakttechnik GmbH & Co. KG
Hansastr. 27
32423 Minden
Phone: +49571 887-0 | Fax: +49571 887-169
Email: info.de@wago.com | Web: www.wago.com

Do you have any questions about our products?
We are always happy to take your call at +49 (571) 887-44222.