Data sheet | Item number: 792-805

Surge suppression module for signal technology; Nominal voltage: 5 VDC; for 2 signal paths with common surge arrester; for interfaces with high baud rate; Two-stage; Width: 6 mm

www.wago.com/792-805

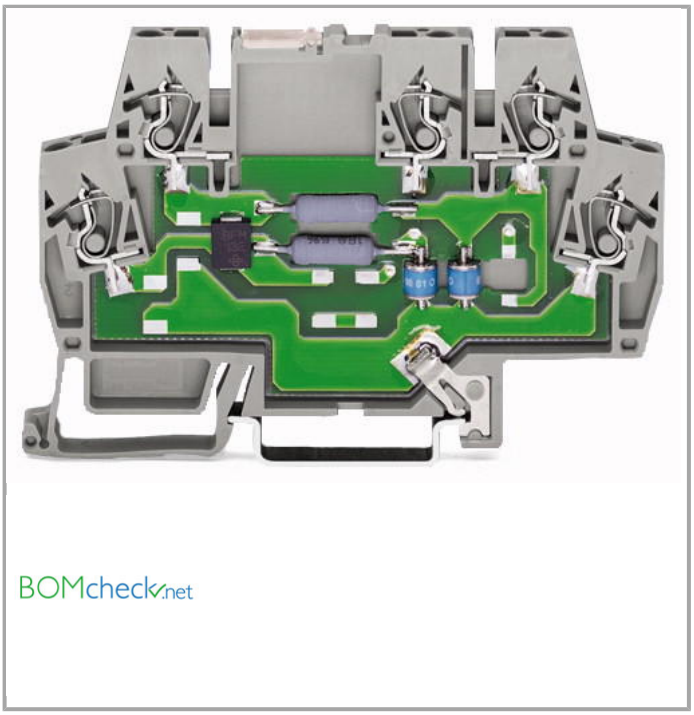

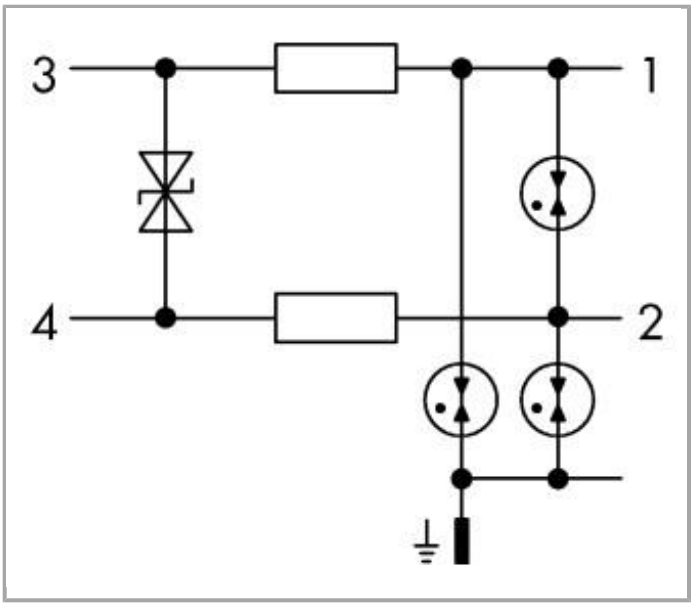

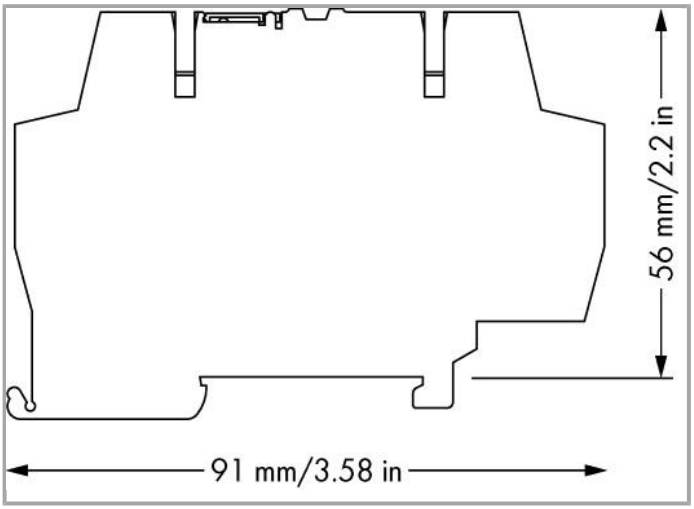

Item description

Short description:

Surge protection devices for IT systems and devices in the voltage range up to 60 V (except special solutions, e.g., telephone systems with call voltage).

Overvoltage protection is also possible for DIN-35 rail-mount terminal blocks. Multi-stage surge suppression devices in rail-mount terminal blocks (792-80x Series) of just 6 mm width ensure cost-effective protection for control and bus technology (e.g. LON® network, PROFIBUS network, binary signals).

Features:

- Protect your system against overvoltage
- Slim, space-saving design
- Control operational costs by preventing expensive, unplanned downtime
- High operational reliability and system uptime

Note:

The coordination characteristics give information about the let-through energy of the overvoltage protector and the protection capacity.

Data

Electrical data

Nominal operating voltage	5 VDC
Maximum continuous operating voltage	4.2 VAC / 6 VDC
Nominal current	0.1 A
Nominal discharge current (8/20 µs) per line	5 kA
Nominal discharge current (8/20 µs) in total	10 kA
Voltage protection level line/line (cat. C2 at I_N)	≤ 27 V
Voltage protection level line/PG (cat. C2 at I_N)	≤ 50 V
Voltage protection level line/line (cat. C3 at I_N)	≤ 14 V
Voltage protection level line/PG (cat. C3 at I_N)	≤ 14 V
Response time line/line	≤ 1 ns
Limit frequency line/line	250 MHz
Impedance	1 Ω
Capacity line/line	≤ 19 pF
Capacity line/PG	≤ 16 pF

Connection data

Connections (number)	5
Connection technology	CAGE CLAMP®
Solid conductor	0.08 … 2.5 mm² / 28 … 14 AWG
Fine-stranded conductor	0.08 … 2.5 mm² / 28 … 14 AWG
Strip length	5 … 6 mm / 0.2 … 0.24 Inch

Geometrical Data

Width	6 mm / 0.236 inch
Height from upper-edge of DIN-35 rail	56 mm / 2.205 inch
Depth	91 mm / 3.583 inch

Mechanical data

Type of mounting	DIN-35 rail

Material Data

Weight	38 g

Environmental Requirements

Surrounding air (operating) temperature	-40 … 80 °C
Surrounding air (storage) temperature	-40 … 80 °C

Standards and specifications

Standards/specifications	IEC 61131-3

Commercial data

Country of origin	DE
GTIN	4017332843737
Customs Tariff No.	85363010900
Product Group	21 (Special Products Electronic)

Compatible products

End plate

	Item no.: 859-525 End and intermediate plate; 1 mm thick	www.wago.com/859-525

Jumper

	Item no.: 859-402 Push-in type jumper bar; 2-way; Nominal current 18 A; insulated	www.wago.com/859-402
	Item no.: 859-402/000-005 Push-in type jumper bar; 2-way; Nominal current 18 A; insulated	www.wago.com/859-402/000-005
	Item no.: 859-402/000-006 Push-in type jumper bar; 2-way; Nominal current 18 A; insulated	www.wago.com/859-402/000-006

	Item no.: 859-402/000-029 Push-in type jumper bar; 2-way; Nominal current 18 A; insulated	www.wago.com/859-402/000-029
	Item no.: 859-403 Push-in type jumper bar; 3-way; Nominal current 18 A; insulated	www.wago.com/859-403
	Item no.: 859-403/000-005 Push-in type jumper bar; 3-way; Nominal current 18 A; insulated	www.wago.com/859-403/000-005
	Item no.: 859-403/000-006 Push-in type jumper bar; 3-way; Nominal current 18 A; insulated	www.wago.com/859-403/000-006
	Item no.: 859-403/000-029 Push-in type jumper bar; 3-way; Nominal current 18 A; insulated	www.wago.com/859-403/000-029
	Item no.: 859-404 Push-in type jumper bar; 4-way; Nominal current 18 A; insulated	www.wago.com/859-404
	Item no.: 859-404/000-005 Push-in type jumper bar; 4-way; Nominal current 18 A; insulated	www.wago.com/859-404/000-005
	Item no.: 859-404/000-006 Push-in type jumper bar; 4-way; Nominal current 18 A; insulated	www.wago.com/859-404/000-006
	Item no.: 859-404/000-029 Push-in type jumper bar; 4-way; Nominal current 18 A; insulated	www.wago.com/859-404/000-029
	Item no.: 859-405 Push-in type jumper bar; 5-way; Nominal current 18 A; insulated	www.wago.com/859-405
	Item no.: 859-405/000-005 Push-in type jumper bar; 5-way; Nominal current 18 A; insulated	www.wago.com/859-405/000-005
	Item no.: 859-405/000-006 Push-in type jumper bar; 5-way; Nominal current 18 A; insulated	www.wago.com/859-405/000-006
	Item no.: 859-405/000-029 Push-in type jumper bar; 5-way; Nominal current 18 A; insulated	www.wago.com/859-405/000-029
	Item no.: 859-406 Push-in type jumper bar; 6-way; Nominal current 18 A; insulated	www.wago.com/859-406
	Item no.: 859-406/000-005 Push-in type jumper bar; 6-way; Nominal current 18 A; insulated	www.wago.com/859-406/000-005
	Item no.: 859-406/000-006 Push-in type jumper bar; 6-way; Nominal current 18 A; insulated	www.wago.com/859-406/000-006

	Item no.: 859-406/000-029 Push-in type jumper bar; 6-way; Nominal current 18 A; insulated	www.wago.com/859-406/000-029
	Item no.: 859-407 Push-in type jumper bar; 7-way; Nominal current 18 A; insulated	www.wago.com/859-407
	Item no.: 859-407/000-005 Push-in type jumper bar; 7-way; Nominal current 18 A; insulated	www.wago.com/859-407/000-005
	Item no.: 859-407/000-006 Push-in type jumper bar; 7-way; Nominal current 18 A; insulated	www.wago.com/859-407/000-006
	Item no.: 859-407/000-029 Push-in type jumper bar; 7-way; Nominal current 18 A; insulated	www.wago.com/859-407/000-029
	Item no.: 859-408 Push-in type jumper bar; 8-way; Nominal current 18 A; insulated	www.wago.com/859-408
	Item no.: 859-408/000-005 Push-in type jumper bar; 8-way; Nominal current 18 A; insulated	www.wago.com/859-408/000-005
	Item no.: 859-408/000-006 Push-in type jumper bar; 8-way; Nominal current 18 A; insulated	www.wago.com/859-408/000-006
	Item no.: 859-408/000-029 Push-in type jumper bar; 8-way; Nominal current 18 A; insulated	www.wago.com/859-408/000-029
	Item no.: 859-409 Push-in type jumper bar; 9-way; Nominal current 18 A; insulated	www.wago.com/859-409
	Item no.: 859-409/000-005 Push-in type jumper bar; 9-way; Nominal current 18 A; insulated	www.wago.com/859-409/000-005
	Item no.: 859-409/000-006 Push-in type jumper bar; 9-way; Nominal current 18 A; insulated	www.wago.com/859-409/000-006
	Item no.: 859-409/000-029 Push-in type jumper bar; 9-way; Nominal current 18 A; insulated	www.wago.com/859-409/000-029
	Item no.: 859-410 Push-in type jumper bar; 10-way; Nominal current 18 A; insulated	www.wago.com/859-410
	Item no.: 859-410/000-005 Push-in type jumper bar; 10-way; Nominal current 18 A; insulated	www.wago.com/859-410/000-005
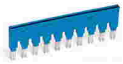	**Item no.: 859-410/000-006** Push-in type jumper bar; 10-way; Nominal current 18 A; insulated	www.wago.com/859-410/000-006

	Item no.: 859-410/000-029 Push-in type jumper bar; 10-way; Nominal current 18 A; insulated	www.wago.com/859-410/000-029

tools

	Item no.: 210-720 Operating tool with partially insulated shaft; Type 2, blade (3.5 x 0.5) mm	www.wago.com/210-720

Marking accessories

	Item no.: 2009-145 Mini-WSB Inline; for smartPRINTER; on reel; stretchable 5 - 5.2 mm; plain; snap-on type	www.wago.com/2009-145
	Item no.: 2009-145/000-002 Mini-WSB Inline; for smartPRINTER; on reel; stretchable 5 - 5.2 mm; plain; snap-on type	www.wago.com/2009-145/000-002
	Item no.: 2009-145/000-005 Mini-WSB Inline; for smartPRINTER; on reel; stretchable 5 - 5.2 mm; plain; snap-on type	www.wago.com/2009-145/000-005
	Item no.: 2009-145/000-006 Mini-WSB Inline; for smartPRINTER; on reel; stretchable 5 - 5.2 mm; plain; snap-on type	www.wago.com/2009-145/000-006
	Item no.: 2009-145/000-007 Mini-WSB Inline; for smartPRINTER; on reel; stretchable 5 - 5.2 mm; plain; snap-on type	www.wago.com/2009-145/000-007
	Item no.: 2009-145/000-012 Mini-WSB Inline; for smartPRINTER; on reel; stretchable 5 - 5.2 mm; plain; snap-on type	www.wago.com/2009-145/000-012
	Item no.: 2009-145/000-023 Mini-WSB Inline; for smartPRINTER; on reel; stretchable 5 - 5.2 mm; plain; snap-on type	www.wago.com/2009-145/000-023
	Item no.: 2009-145/000-024 Mini-WSB Inline; on reel; stretchable 5 - 5.2 mm; plain; snap-on type	www.wago.com/2009-145/000-024
	Item no.: 210-110 Fiber-tip pen	www.wago.com/210-110
	Item no.: 248-450 Mini-WSB marking card; as card; MARKED; K1 - K10 (10x); not stretchable; Horizontal marking; snap-on type	www.wago.com/248-450
	Item no.: 248-451 Mini-WSB marking card; as card; MARKED; K11 - K20 (10x); not stretchable; Horizontal marking; snap-on type	www.wago.com/248-451
	Item no.: 248-452 Mini-WSB marking card; as card; MARKED; K (100x); not stretchable; Horizontal marking; snap-on type	www.wago.com/248-452
	Item no.: 248-453 Mini-WSB marking card; as card; MARKED; U1, ... U10 (10x); not stretchable; Horizontal marking; snap-on type	www.wago.com/248-453

	Item no.: 248-454 Mini-WSB marking card; as card; MARKED; U11 - U20 (10x); not stretchable; Horizontal marking; snap-on type	www.wago.com/248-454
	Item no.: 248-455 Mini-WSB marking card; as card; MARKED; U 100 (10x); not stretchable; Horizontal marking; snap-on type	www.wago.com/248-455
	Item no.: 248-501 Miniature WSB Quick marking system; plain; Marker width 5 mm; 10 strips with 10 markers per card	www.wago.com/248-501
	Item no.: 248-501/000-002 Mini-WSB marking card; as card; not stretchable; plain; snap-on type	www.wago.com/248-501/000-002
	Item no.: 248-501/000-005 Mini-WSB marking card; as card; plain; snap-on type	www.wago.com/248-501/000-005
	Item no.: 248-501/000-006 Mini-WSB marking card; as card; not stretchable; plain; snap-on type	www.wago.com/248-501/000-006
	Item no.: 248-501/000-007 Mini-WSB marking card; as card; not stretchable; plain; snap-on type	www.wago.com/248-501/000-007
	Item no.: 248-501/000-012 Mini-WSB marking card; as card; not stretchable; plain; snap-on type	www.wago.com/248-501/000-012
	Item no.: 248-501/000-017 Mini-WSB marking card; as card; not stretchable; plain; snap-on type	www.wago.com/248-501/000-017
	Item no.: 248-501/000-023 Mini-WSB marking card; as card; not stretchable; plain; snap-on type	www.wago.com/248-501/000-023
	Item no.: 248-501/000-024 Mini-WSB marking card; as card; not stretchable; plain; snap-on type	www.wago.com/248-501/000-024
	Item no.: 248-502/000-024 Mini-WSB marking card; as card; MARKED; 1 ... 10 (10x); not stretchable; Horizontal marking; snap-on type	www.wago.com/248-502/000-024
	Item no.: 248-503/000-024 Mini-WSB marking card; as card; MARKED; 11 ... 20 (10x); not stretchable; Horizontal marking; snap-on type	www.wago.com/248-503/000-024
	Item no.: 248-504/000-024 Mini-WSB marking card; as card; MARKED; 21 ... 30 (10x); not stretchable; Horizontal marking; snap-on type	www.wago.com/248-504/000-024
	Item no.: 248-505/000-024 Mini-WSB marking card; as card; MARKED; 31 ... 40 (10x); not stretchable; Horizontal marking; snap-on type	www.wago.com/248-505/000-024
	Item no.: 248-566	

Mini-WSB marking card; as card; MARKED; 1 ... 50 (2x); not stretchable; Horizontal marking; snap-on type	www.wago.com/248-566

Downloads

Documentation

Additional Information

Disposal; Electrical and electronic equipment, Packaging	Oct 15, 2018	265.8 kB	Download

Subject to changes.

WAGO Kontakttechnik GmbH & Co. KG
Hansastr. 27
32423 Minden
Phone: +49571 887-0 | Fax: +49571 887-169
Email: info.de@wago.com | Web: www.wago.com

Do you have any questions about our products?
We are always happy to take your call at +49 (571) 887-44222.