Data sheet | Item number: 806-206

2-conductor PCB terminal block; 1.5 mm²; Pin spacing 5 mm; 6-pole; Push-in CAGE CLAMP®

www.wago.com/806-206

RoHS ✓ Compliant

BOMcheck.net

Color:

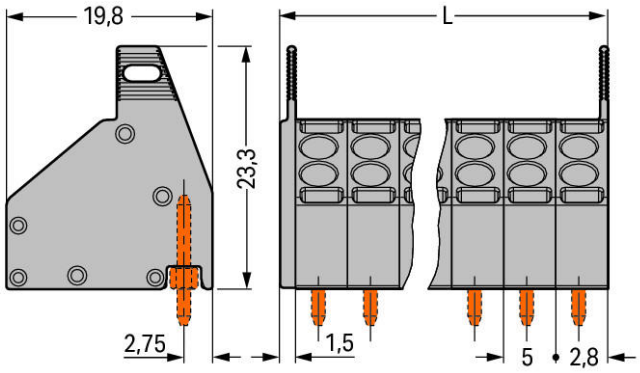

L = (pole no. x pin spacing) + 1.5 mm

Item description

- Compact, 2-conductor PCB connector strips (pinstrip pluggable) with Push-in CAGE CLAMP® connection and screwdriver-actuation
- Push-in termination of solid and ferruled conductors
- Double entries for power supply and potential distribution
- Quick and easy PCB replacement, without disrupting looped-through potentials

Other variants can be requested via the WAGO sales department or, if necessary, configured at https://configurator.wago.com/: Direct marking, Mixed-color terminal strips,Other colors,Other pole numbers

Data

Electrical data

Ratings per IEC/EN 60664-1

Rated voltage (III / 3)	250 V
Rated impulse voltage (III / 3)	4 kV

Rated voltage (III / 2)	320 V
Rated impulse voltage (III / 2)	4 kV
Rated voltage (II / 2)	630 V
Rated impulse voltage (II / 2)	4 kV
Rated current	10 A
Legend (ratings)	(III / 2) ≙ Overvoltage category III / Pollution degree 2

Approvals per UL 1059

Rated voltage UL (Use Group B)	300 V
Rated current UL (Use Group B)	10 A
Rated voltage UL (Use Group D)	300 V
Rated current UL (Use Group D)	10 A

Approvals per CSA

Rated voltage CSA (Use Group B)	300 V
Rated current CSA (Use Group B)	10 A

Connection data

Connection technology	Push-in CAGE CLAMP®
Actuation type	Operating tool
Solid conductor	0.2 … 1.5 mm² / 24 … 16 AWG
Fine-stranded conductor	0.2 … 1.5 mm² / 24 … 16 AWG
Fine-stranded conductor with ferrule with plastic collar	0.25 … 1 mm²
Fine-stranded conductor with ferrule without plastic collar	0.25 … 1 mm²
Strip length	9 … 10 mm / 0.35 … 0.39 Inch
Conductor entry angle to the PCB	45 °
No. of poles	6
Total number of connection points	12
Total number of potentials	6
Number of connection types	1
Number of levels	1

Geometrical Data

Pin spacing	5 mm (0.197 inch)
Width	31.5 mm / 1.24 inch
Height	23.3 mm / 0.917 inch
Depth	19.8 mm / 0.78 inch
Solder pin diameter	1 mm

Plug connection

Contact type (pluggable connector)	Female connector/socket
Connector connection type	for PCBs
Mating direction to the PCB	90 °

PCB contact

PCB contact	THT

Material Data

Color	gray
Material group	I
Insulating material	Polyamide 66 (PA 66)
Flammability class per UL94	V0
Clamping spring material	Chrome nickel spring steel (CrNi)
Contact material	Copper alloy
Contact plating	tin-plated
Fire load	0.155 MJ
Weight	7.75 g

Environmental Requirements

Limit temperature range	-60 … +105 °C

Commercial data

Country of origin	PL
GTIN	4045454077112
Customs Tariff No.	85369010000
Product Group	4 (Printed Circuit)

Approvals / Certificates

Country specific Approvals

Logo	Approval	Certificate name
CCA	**CCA** DEKRA Certification B.V.	NTR NL 7444
KEMA KEUR	**CCA** DEKRA Certification B.V.	2169331.27

UL-Approvals

Logo	Approval	Certificate name
	UR Underwriters Laboratories Inc.	E45172, sec. 6

Compatible products

tools

	Item no.: 210-657 Operating tool with partially insulated shaft; Blade (3.5 x 0.5) mm; short	www.wago.com/210-657
	Item no.: 210-720 Operating tool with partially insulated shaft; Type 2, blade (3.5 x 0.5) mm	www.wago.com/210-720

ferrule

	Item no.: 216-101 Ferrule; Sleeve for 0.5 mm² / AWG 22; uninsulated; electro-tin plated	www.wago.com/216-101
	Item no.: 216-102 Ferrule; Sleeve for 0.75 mm² / AWG 20; uninsulated; electro-tin plated	www.wago.com/216-102
	Item no.: 216-103 Ferrule; Sleeve for 1 mm² / AWG 18; uninsulated; electro-tin plated	www.wago.com/216-103
	Item no.: 216-121 Ferrule; Sleeve for 0.5 mm² / AWG 22; uninsulated; electro-tin plated	www.wago.com/216-121
	Item no.: 216-122 Ferrule; Sleeve for 0.75 mm² / AWG 20; uninsulated; electro-tin plated	www.wago.com/216-122
	Item no.: 216-123 Ferrule; Sleeve for 1 mm² / AWG 18; uninsulated; electro-tin plated	www.wago.com/216-123
	Item no.: 216-131 Ferrule; Sleeve for 0.25 mm² / AWG 24; uninsulated; electro-tin plated	www.wago.com/216-131
	Item no.: 216-132 Ferrule; Sleeve for 0.34 mm² / AWG 24; uninsulated; electro-tin plated	www.wago.com/216-132
	Item no.: 216-141 Ferrule; Sleeve for 0.5 mm² / AWG 22; uninsulated; electro-tin plated; electrolytic copper; gastight crimped; acc. to DIN 46228, Part 1/08.92	www.wago.com/216-141
	Item no.: 216-142 Ferrule; Sleeve for 0.75 mm² / AWG 20; uninsulated; electro-tin plated; electrolytic copper; gastight crimped; acc. to DIN 46228, Part 1/08.92	www.wago.com/216-142
	Item no.: 216-143 Ferrule; Sleeve for 1 mm² / AWG 18; uninsulated; electro-tin plated; electrolytic copper; gastight crimped; acc. to DIN 46228, Part 1/08.92	www.wago.com/216-143
	Item no.: 216-151 Ferrule; Sleeve for 0.25 mm² / AWG 24; uninsulated; electro-tin plated	www.wago.com/216-151

	Item no.: 216-152 Ferrule; Sleeve for 0.34 mm² / AWG 24; uninsulated; electro-tin plated	www.wago.com/216-152
	Item no.: 216-201 Ferrule; Sleeve for 0.5 mm² / AWG 22; insulated; electro-tin plated	www.wago.com/216-201
	Item no.: 216-202 Ferrule; Sleeve for 0.75 mm² / AWG 20; insulated; electro-tin plated	www.wago.com/216-202
	Item no.: 216-203 Ferrule; Sleeve for 1 mm² / AWG 18; insulated; electro-tin plated	www.wago.com/216-203
	Item no.: 216-221 Ferrule; Sleeve for 0.5 mm² / AWG 22; insulated; electro-tin plated	www.wago.com/216-221
	Item no.: 216-222 Ferrule; Sleeve for 0.75 mm² / AWG 20; insulated; electro-tin plated	www.wago.com/216-222
	Item no.: 216-223 Ferrule; Sleeve for 1 mm² / AWG 18; insulated; electro-tin plated	www.wago.com/216-223
	Item no.: 216-241 Ferrule; Sleeve for 0.5 mm² / AWG 22; insulated; electro-tin plated; electrolytic copper; gastight crimped; acc. to DIN 46228, Part 4/09.90	www.wago.com/216-241
	Item no.: 216-242 Ferrule; Sleeve for 0.75 mm² / AWG 20; insulated; electro-tin plated; electrolytic copper; gastight crimped; acc. to DIN 46228, Part 4/09.90	www.wago.com/216-242
	Item no.: 216-243 Ferrule; Sleeve for 1 mm² / AWG 18; insulated; electro-tin plated; electrolytic copper; gastight crimped; acc. to DIN 46228, Part 4/09.90	www.wago.com/216-243
	Item no.: 216-262 Ferrule; Sleeve for 0.75 mm² / AWG 20; insulated; electro-tin plated; electrolytic copper; gastight crimped; acc. to DIN 46228, Part 4/09.90	www.wago.com/216-262
	Item no.: 216-263 Ferrule; Sleeve for 1 mm² / AWG 18; insulated; electro-tin plated; electrolytic copper; gastight crimped; acc. to DIN 46228, Part 4/09.90	www.wago.com/216-263
	Item no.: 216-264 Ferrule; Sleeve for 1.5 mm² / AWG 16; insulated; electro-tin plated; electrolytic copper; gastight crimped; acc. to DIN 46228, Part 4/09.90	www.wago.com/216-264
	Item no.: 216-284 Ferrule; Sleeve for 1.5 mm² / AWG 16; insulated; electro-tin plated; electrolytic copper; gastight crimped; acc. to DIN 46228, Part 4/09.90	www.wago.com/216-284
	Item no.: 216-301 Ferrule; Sleeve for 0.25 mm² / AWG 24; insulated; electro-tin plated	www.wago.com/216-301
	Item no.: 216-302 Ferrule; Sleeve for 0.34 mm² / AWG 24; insulated; electro-tin plated	www.wago.com/216-302
	Item no.: 216-321 Ferrule; Sleeve for 0.25 mm² / AWG 24; insulated; electro-tin plated	www.wago.com/216-321
	Item no.: 216-322 Ferrule; Sleeve for 0.34 mm² / AWG 24; insulated; electro-tin plated	www.wago.com/216-322

General accessories

Item no.: 806-906
Board-to-Board Link; 6-pole

www.wago.com/806-906

Downloads

smartDATA

CAD data

3D Download 806-206	URL	Download

Subject to changes.

WAGO Kontakttechnik GmbH & Co. KG
Hansastr. 27
32423 Minden
Phone: +49571 887-0 | Fax: +49571 887-169
Email: info.de@wago.com | Web: www.wago.com

Do you have any questions about our products?
We are always happy to take your call at +49 (571) 887-44222.