Mounting Blocks

1010.300

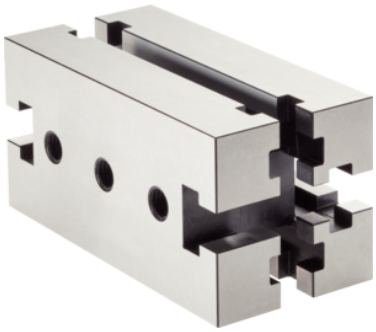

Product Description

Material

- Steel, case-hardened, ground

Drawing

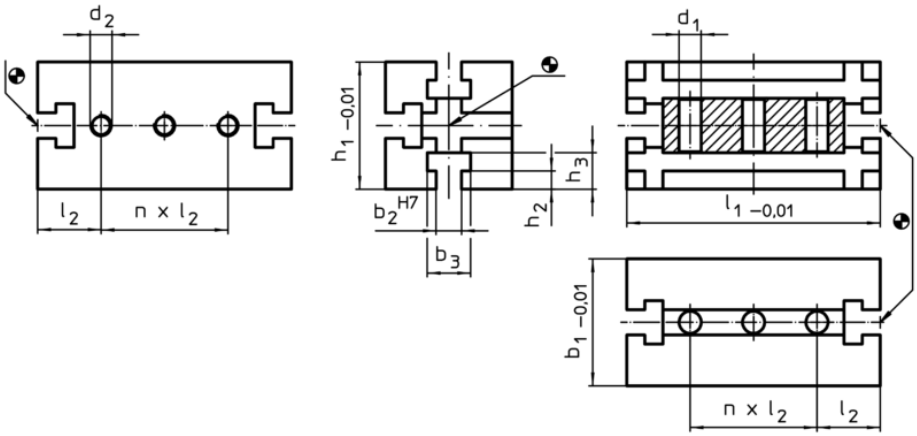

Order information

System	Dimensions									Amount		Art. No.
	b_1	l_1	b_2	b_3	l_2	h_1	h_2	h_3	d_1	n		
	[mm]										[g]	
V40	40	120	10	17	20	40	6,5	12,5	8,25	4	905	1010.300