Slotted Clamping Angles

1112.300

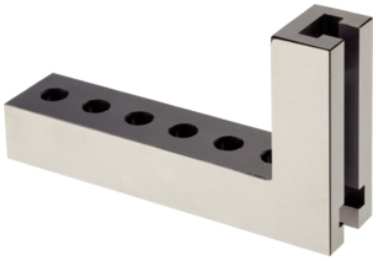

Product Description

Material

- Steel, case-hardened, ground

Drawing

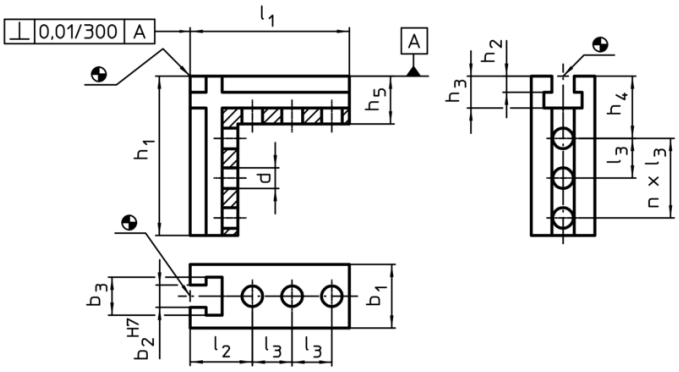

Order information

System	Dimensions												Amount		Art. No.
	b_1	h_1	l_1	l_2	l_3	b_2	b_3	h_2	h_3	h_4	h_5	d	n		
	[mm]													[g]	
V70	70	100	100	39	25	14	24	10	20	39	30	13	2	2150	1112.300
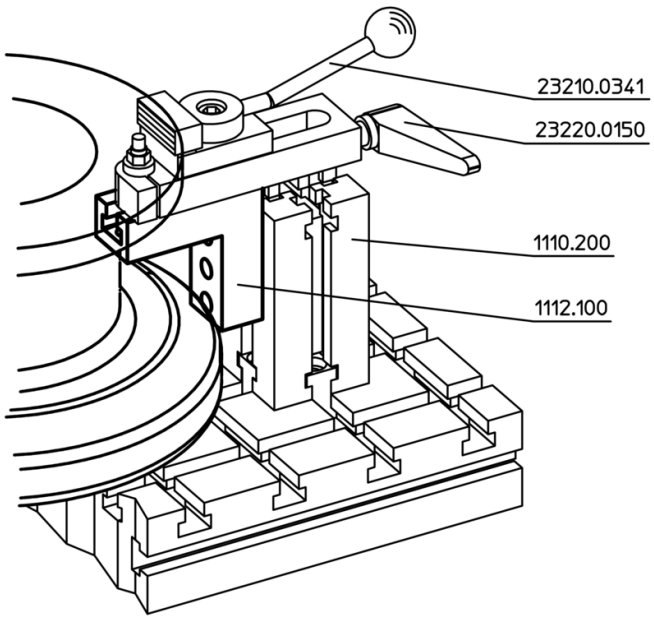
Application example