# T-Slot Centering Blocks

1129.600

## Product Description

### Material

- Steel, case-hardened, ground

## Drawing

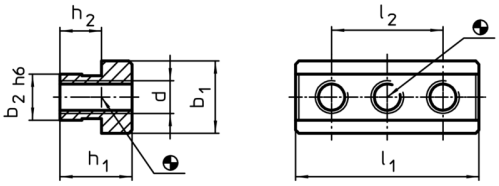


## Order information

| System | Dimensions | | | | | | | | Art. No. |
|---|---|---|---|---|---|---|---|---|---|
| | $h_1$ | $h_2$ | $b_1$ | $b_2$ | d | $l_1$ | $l_2$ | [g] | |
| | [mm] | | | | | | | | |
| V70 | 22 | 12,7 | 22 | 14 | M10 | 56 | 34 | 130 | 1129.600 |
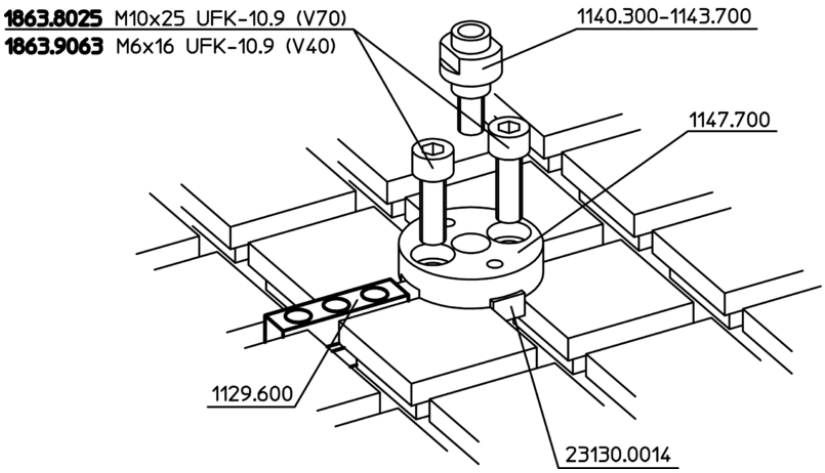
## Application example