V-Blocks

1548.100

Product Description

Material

- Steel, case-hardened, ground

Drawing

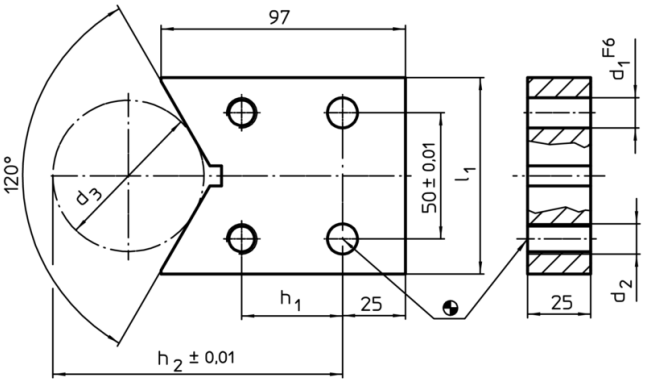

Order information

System	Dimensions									Art. No.
	l_1	h_1	h_2	d_1	d_2	d_3	d_3 min.	d_3 max.		
	[mm]								[g]	
L12	78	40	115	12	M12	60	18	148	1230	1548.100
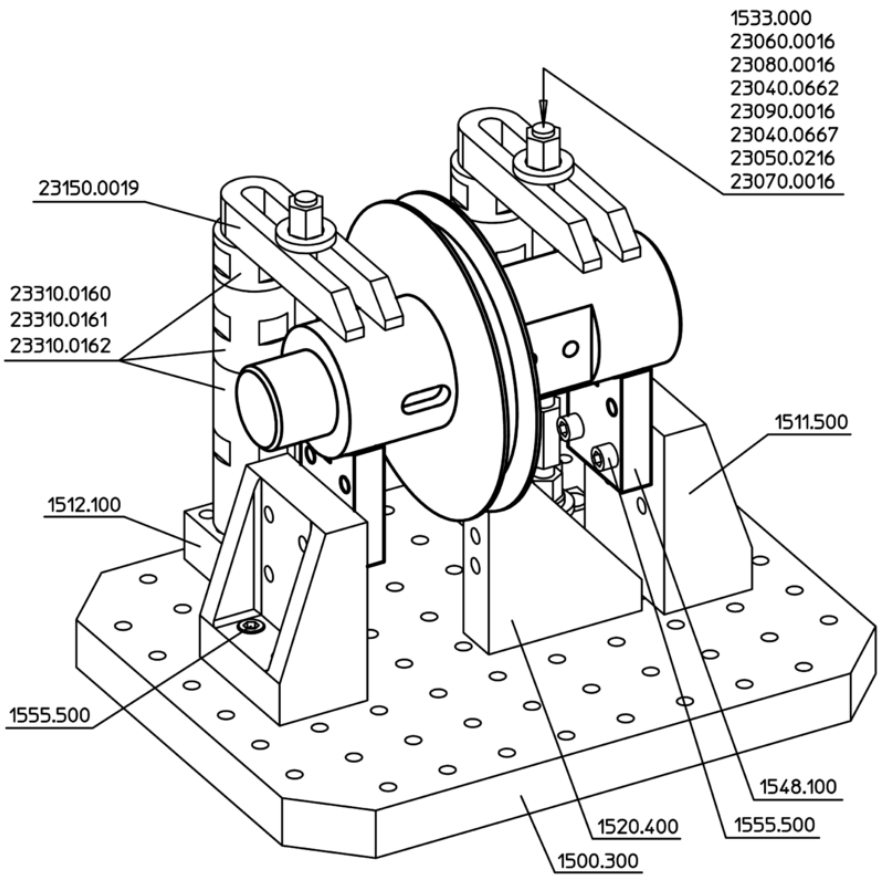
Application example