Stops• Gripper Studs
1586.021

Product Description

Gripper insert consists of two pins from HSS, when clamped they penetrate into the workpiece surface and may leave residual marks.

Material

Insert
- Hard metal, pointed

Body
- Tool steel, hardened

Drawing

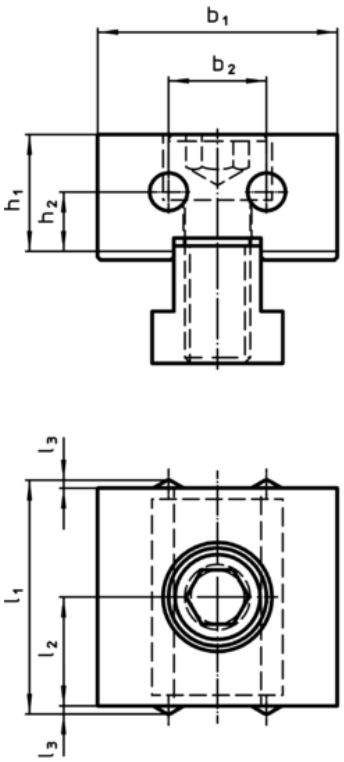

picture 1

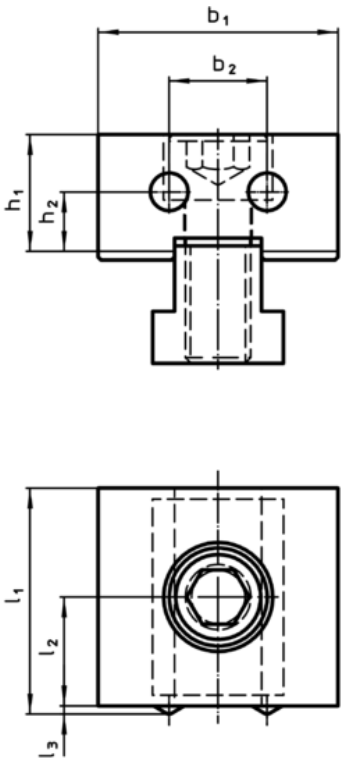

picture 2

Order information

Dimensions l_1	l_2	l_3	b_1	b_2	h_1	h_2 [mm]	[g]	Art. No.
gripper studs and plain – picture 2								
41	20	1	44	18	21,4	11	390	1586.021